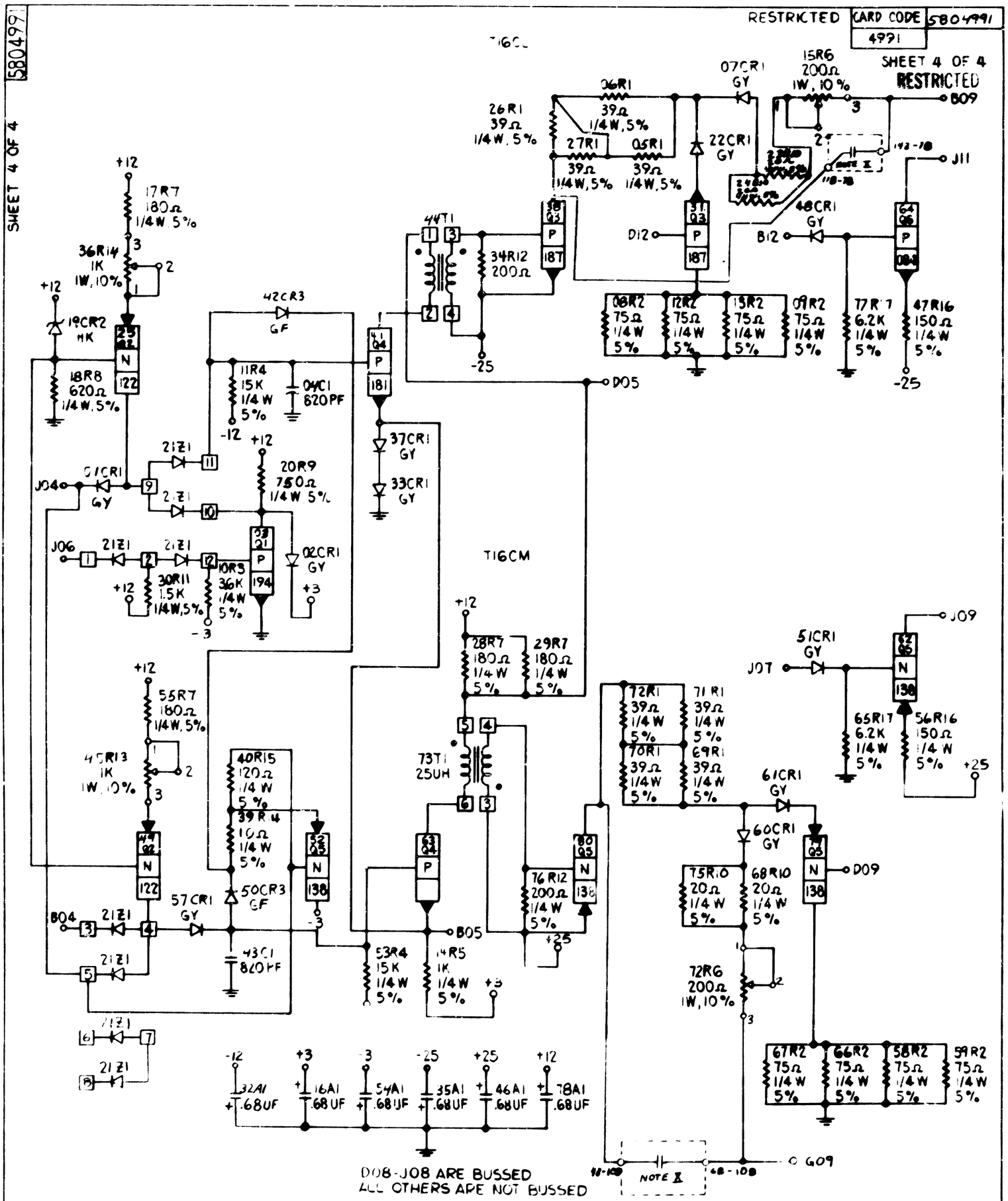


NOTE X ACCOMODATION HAS BEEN MADE FOR A 240 PF CAP P/N 350437 IN THIS POSITION.

| INTERNATIONAL BUSINESS MACHINES CORP. | DATE | CHANGE NO | DATE | CHANGE NO | NOTE | DEVELOPMENT NO |
|---|---|---|---|---|---|---|
| NAME CARD ASM.-A&B SHUNT COMPENSATION | 6-8-65 | 163139A | | | X PRIOR TO ENG. SPEC. NO 895291 | |
| DESIGN MODEL 2361A | | 165588 B | | | | |
| DETAIL | 16NOV65 | 166153 C | | | | |
| CHECK DRAWN GT 4-7-65 | | | | | | |
| APPRO CHECK | | | | | | |

5804991