STANDARDS CODE	2-7045		SHEET 2 OF 5	5804992
CIRCUIT APPROVAL	REB	07-28-64	STATUS	ACTIVE
LOCATION	KINGSTON			RESTRICTED
RAW CARD NUMBER	5819120 1		HOLE PATTERN	5819120
FRONT ARTWORK	DATE	CHANGE NO.	DATE	CHANGE NO
5819120	8-17-64 DEV 3789			
BACK ARTWORK	9-18-65 163109A			
5819120				

PIN	VOLT.	PIN	VOLT.
J03	+ 3	D03	+ 3
B06	- 3	G06	- 3
B11	+ 6	G11	+ 6
J05	+12	G02	+25
D13	-25	D08	GND
G08	GND	D10	-12

CODE	PART NO	VALUE			QTY
R 1	482028	4.020K	.25	+ 1	4
R 2	528920	392.000	.12	+ 1	4
R 3	216994	1.800K	2.00	+ 5	4
R 4	317007	220.000	.50	+ 5	4
R 5	213692	3.300K	.50	+ 5	4
CR 1	492496	BLS			4
Q 1	369686	178 NPN			4
Q 2	2414918	138 PNP			4
Z 1	361429	SLT MODULE			1
Z 2	361459	SLT MODULE			4
A 1	2414961	RC MODULE			14
A 2	2414883	RC MODULE			8
FA					22
HA	811157				04
HB	811399				C4

NOTES.

AA-ALL CIRCUITS MUST CONFORM TO ENG.SPEC. SHOWN ON SHEET 1.

AB-ASSEMBLE TO ENGINEERING SPECIFICATION 890913

AK-CARD HAS BEEN DECOUPLED 811800 IS .JT APPLICABLE.

FA-TECH LAB EVALUATION INCOMPLETE. PART SUBJECT TO WITHDRAWAL.
ADDITIONAL USAGE TO BE AVOIDED

HA-ASSEMBLE WITH P/N 811137 (TO-18) SPACER.

HB-ASSEMBLE WITH P/N 11399 (TO-5) SPACER.

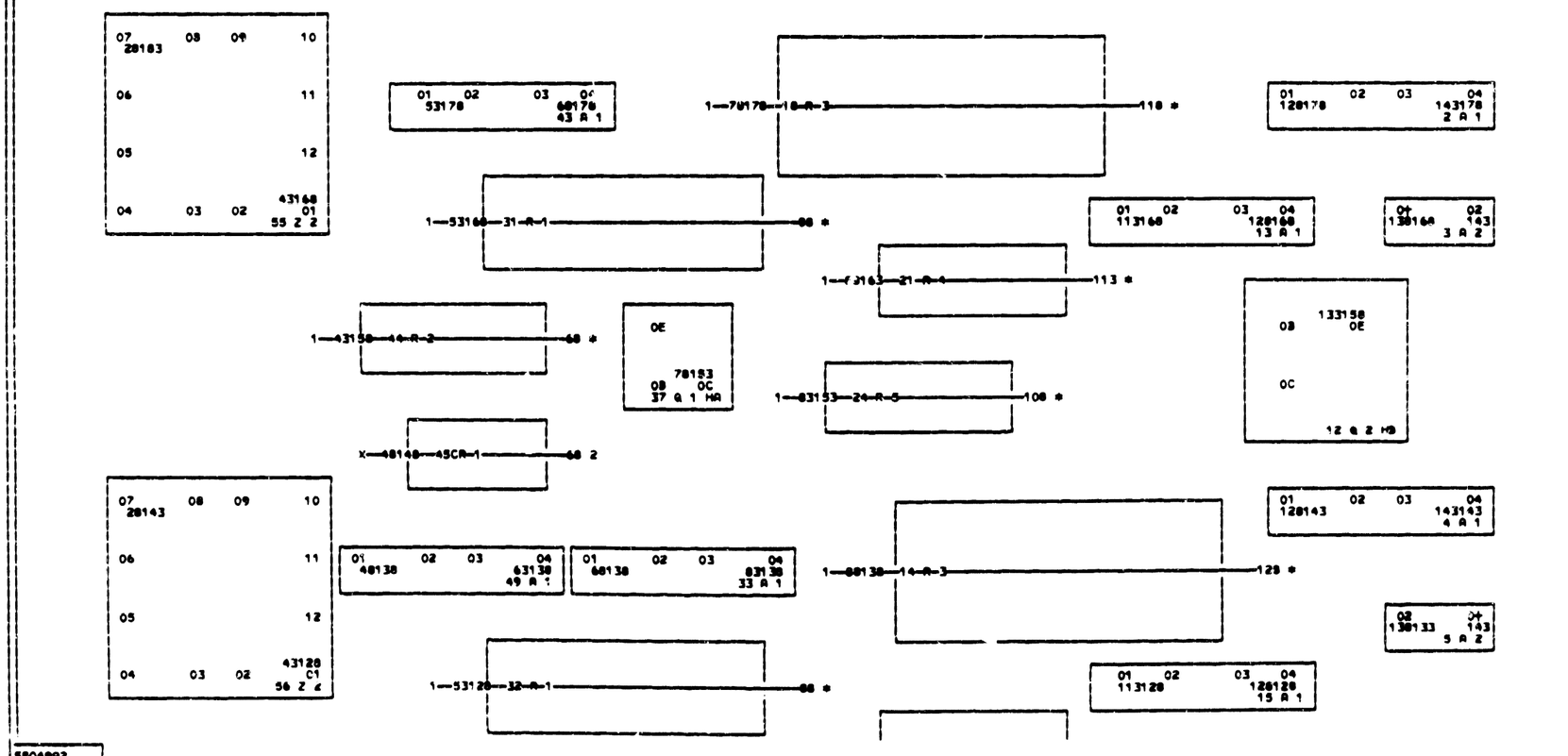

INTERNATIONAL BUSINESS MACHINES CORP.

NAME	CARD ASM A GROUP AND DRIVER				
DESIGN	07-14-64	NIS	TYPE	2361	
DETAIL	07-14-64	NIS	SCALE	NONE	
CHECK	07-23-64	RFR	DRAW	7090	00-00-00
APPRO	07-28-64	REB	L.C.N.		LAMINATED

5804992