STANDARDS CODE 27045

5804992

CARD CODE 4992 5804992

RESTRICTED

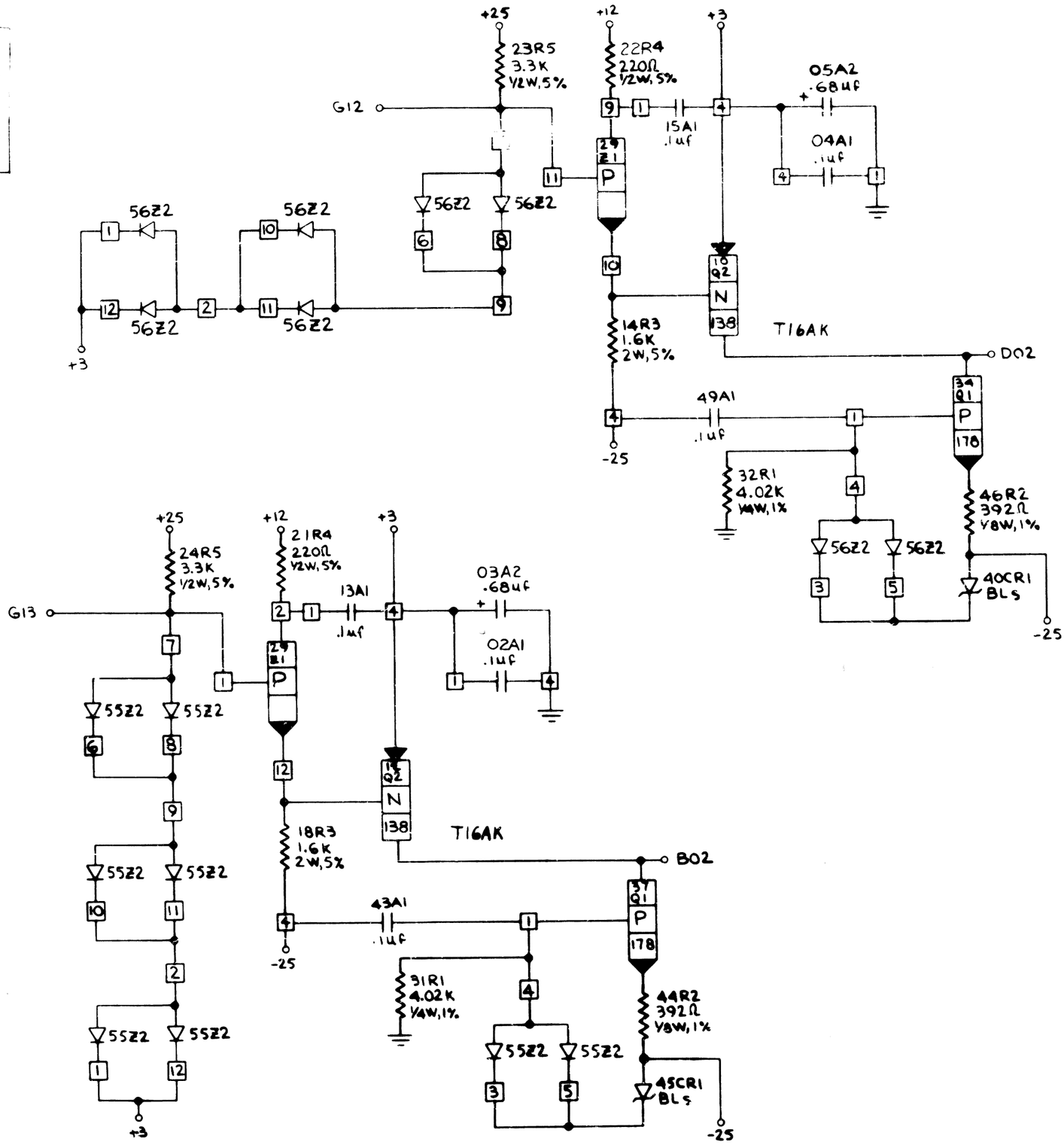

SHEET 4 OF 5

CIRCUIT AND PACKAGING STANDARD	
APPROVAL	DATE

INTERNATIONAL BUSINESS MACHINES CORP.	DATE	CHANGE NO.	APPROVAL	DATE	CHANGE NO.	APPROVAL	DEVELOPMENT NO.
BASIC KARD ASM-A GROUP AND DRIVER	8-17-64	DEV. 3908					
	3-18-65	63109 A					
							5804992

C

5804992