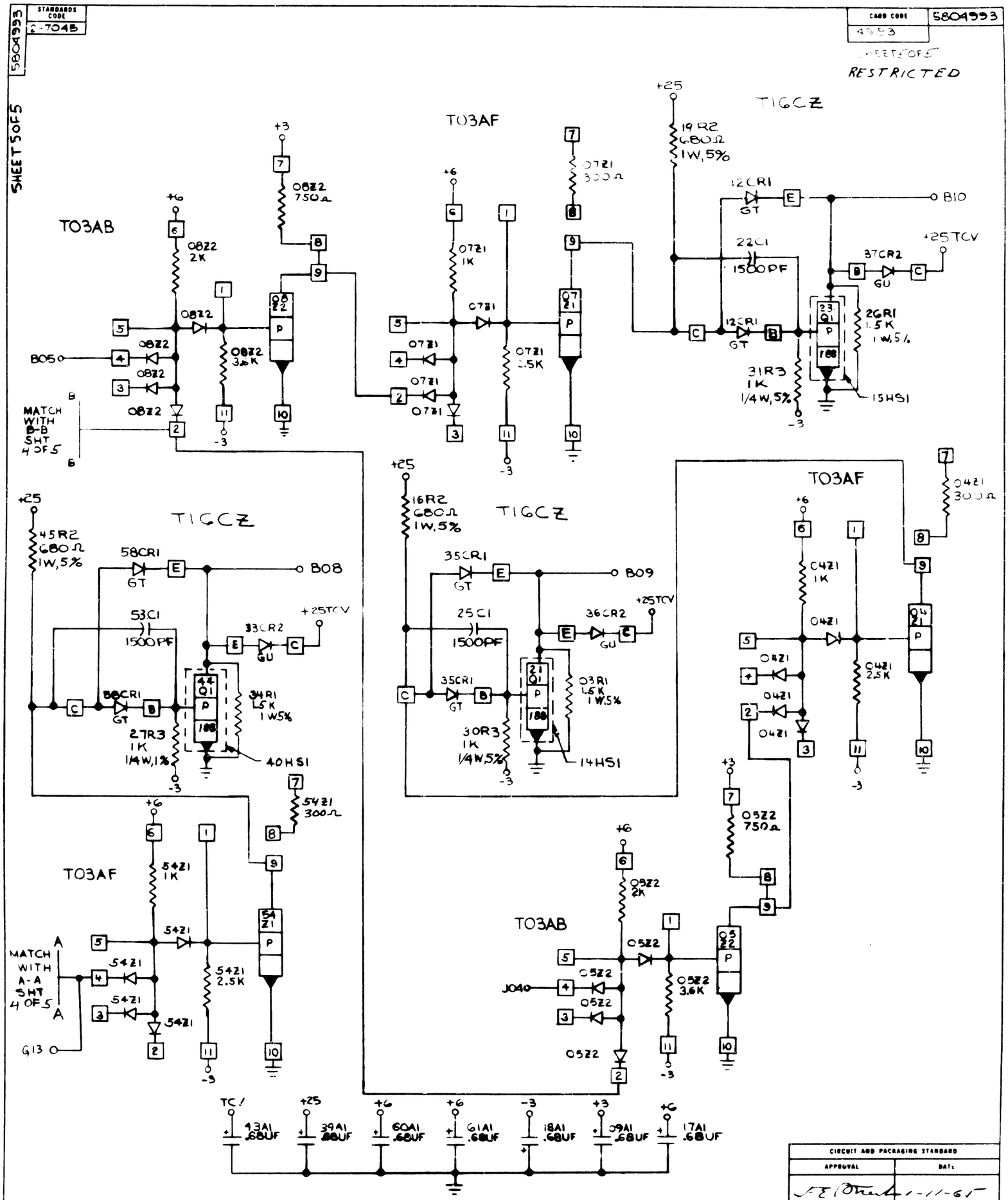
5804993
STANDARDS CODE
2-704B
CARD CODE
4993
5804993
SHEET 5 OF 5
RESTRICTED
SHEET 5 OF 5
T03AB
T03AF
T16CZ
+25
+3
+6
-3
08Z2 750Ω
08Z2 2K
08Z2
08Z2 3.6K
B05
MATCH WITH B-B SHT 4 OF 5
07Z1 300Ω
07Z1 1K
07Z1
07Z1 2.5K
19R2 680Ω 1W,5%
12CR1
GT
B10
22C1 1500PF
37CR2
GU
+25TCV
12CR1
23Q1
26R1 1.5K 1W,5%
31R3 1K 1/4W,5%
15HS1
16R2 680Ω 1W,5%
35CR1
B09
25C1 1500PF
36CR2
03R1 1.5K 1W,5%
30R3 1K 1/4W,5%
14HS1
45R2 680Ω 1W,5%
58CR1
B08
53C1 1500PF
33CR2
50CR1
44Q1
34R1 1.5K 1W,5%
27R3 1K 1/4W,1%
40HS1
04Z1 300Ω
04Z1 1K
04Z1
04Z1 2.5K
05Z2 750Ω
05Z2 2K
05Z2
05Z2 3.6K
J040
54Z1 300Ω
54Z1 1K
54Z1
54Z1 2.5K
MATCH WITH A-A SHT 4 OF 5
G13
TC1
43A1 .68UF
39A1 .68UF
60A1 .68UF
61A1 .68UF
18A1 .68UF
09A1 .68UF
17A1 .68UF
CIRCUIT AND PACKAGING STANDARD
APPROVAL
DATE
1-11-65
INTERNATIONAL BUSINESS MACHINES CORP.
NAME CARD ASM - BIT DRIVERS
MODEL 2361
SCALE NONE
DATE 1-22-65
CHANGE NO. 162185
SAU565, 164942B
DEVELOPMENT NO
5804993
C