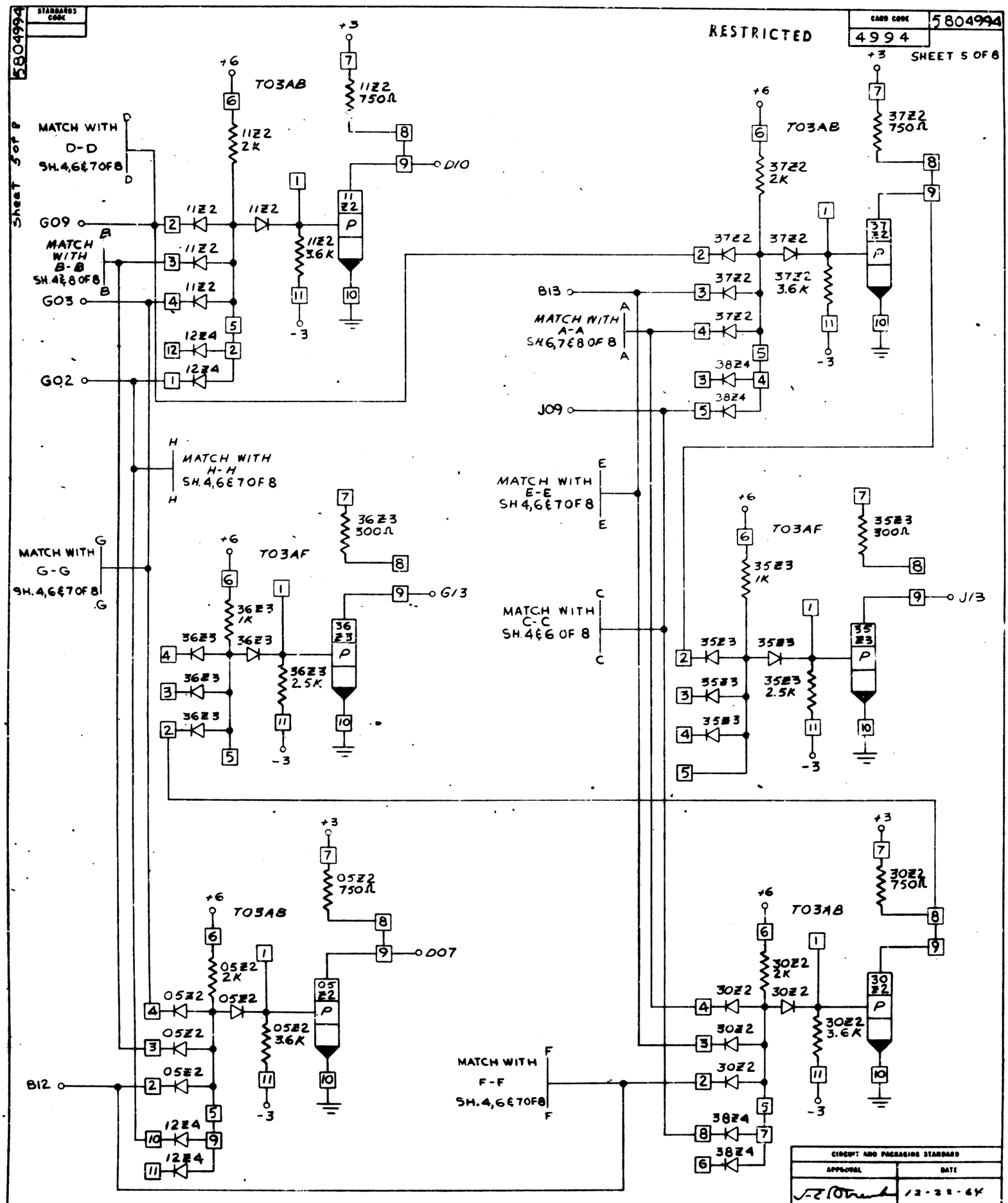
RESTRICTED
CARD CODE 4994
5804994
SHEET 5 OF 8
STANDARDS CODE
Sheet 5 of 8
T03AB
T03AF
MATCH WITH D-D SH.4,6&7 OF 8
MATCH WITH B-B SH.4&8 OF 8
MATCH WITH A-A SH.6,7&8 OF 8
MATCH WITH H-H SH.4,6&7 OF 8
MATCH WITH E-E SH 4,6&7 OF 8
MATCH WITH G-G SH.4,6&7 OF 8
MATCH WITH C-C SH.4&6 OF 8
MATCH WITH F-F SH.4,6&7 OF 8
G09
G03
G02
B13
J09
D10
G13
J13
D07
B12
11Z2 750Ω
11Z2 2K
11Z2 3.6K
37Z2 750Ω
37Z2 2K
37Z2 3.6K
36Z3 300Ω
36Z3 1K
36Z3 2.5K
35Z3 300Ω
35Z3 1K
35Z3 2.5K
05Z2 750Ω
05Z2 2K
05Z2 3.6K
30Z2 750Ω
30Z2 2K
30Z2 3.6K
CIRCUIT AND PACKAGING STANDARD
APPROVAL
DATE
12-22-64
INTERNATIONAL BUSINESS MACHINES CORP.
CARD ASM-A&B WORD & SWITCH GATE SELECT
2261A
DATE
1-15-65
CHANGE NO.
162191
APPROVAL
DEVELOPMENT NO.
5804994
C