STANDARDS CODE

5804994

RESTRICTED

CARD CODE 4994 5804994

SHEET 8 OF 8

sheet 8 of 8

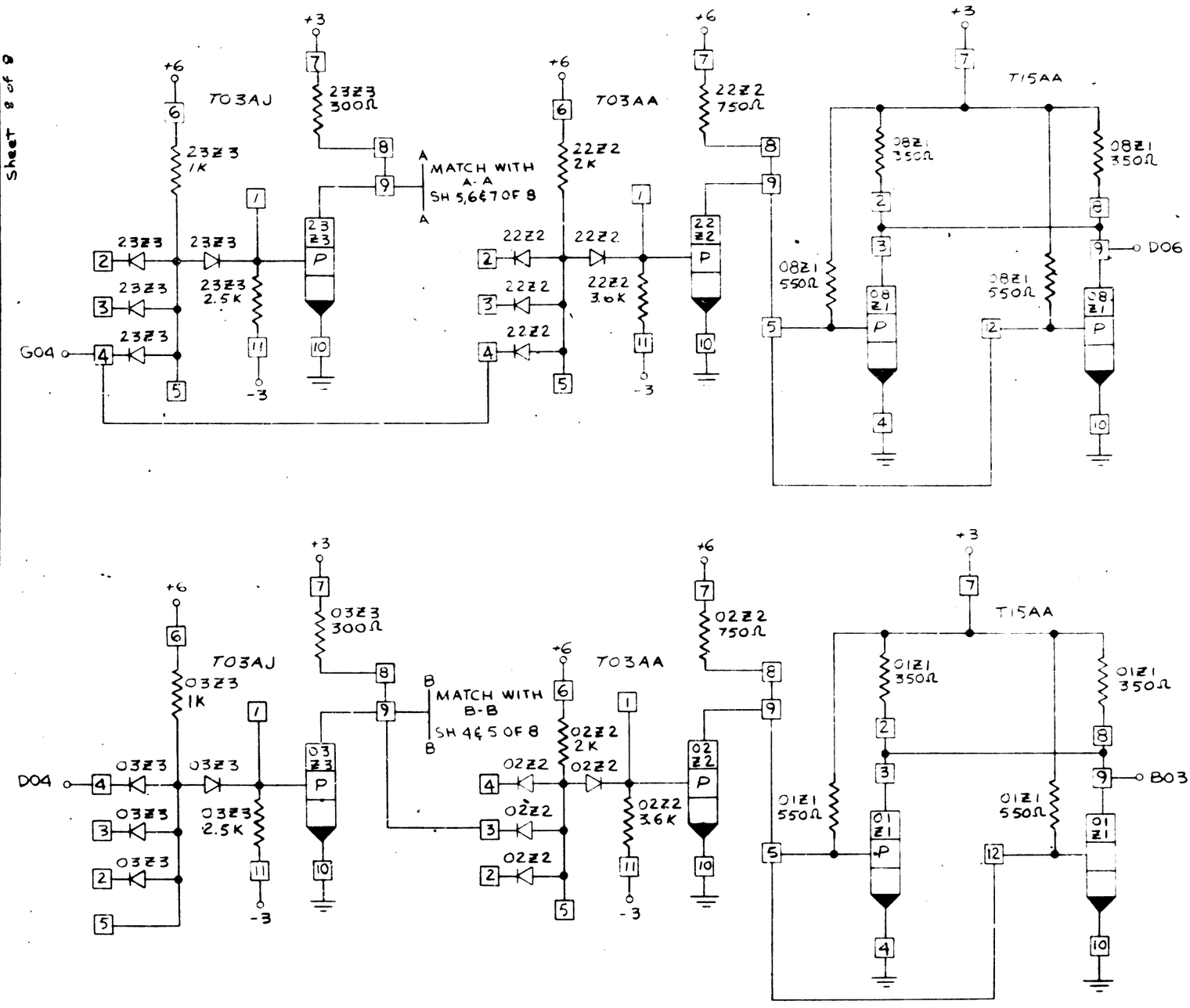

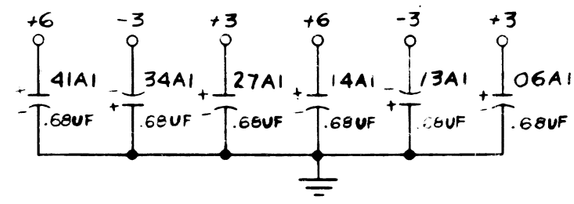

CIRCUIT AND PACKAGING STANDARD	
APPROVAL	DATE
F E Otheck	12-22-64

INTERNATIONAL BUSINESS MACHINES CORP.													
NAME	CARD ASM-A&B WORD & SWITCH GATE SELECT				DATE	CHANGE NO.	APPROVAL	DATE	CHANGE NO.	APPROVAL	DEVELOPMENT NO.	5804994
DESIGN	NIS	7-24-64	MODEL	2361A	11-15-65	162191						
DETAIL	NIS	7-24-64	SCALE									
CHECK	RSS	12-21-64	DRAW									
APPR	JZS	10-23-64	CHECK									

C

C.S. CO., NO. 57410 10-64