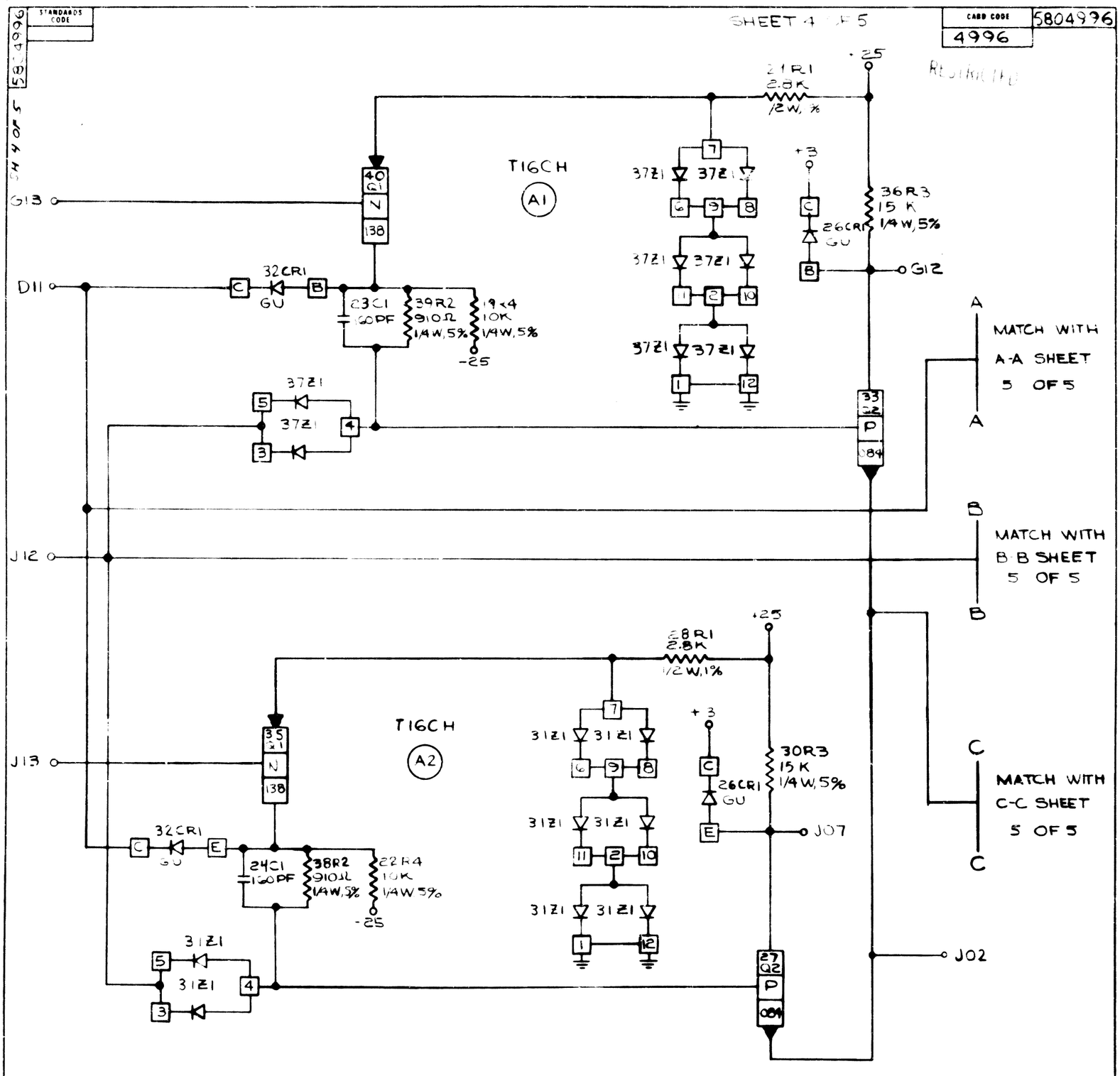

BUSSING NOTE

D08, J08 ARE BUSSED
D03, J03 ARE NOT BUSSED

CIRCUIT AND PACKAGING STANDARD	
APPROVAL	DATE

INTERNATIONAL BUSINESS MACHINES CORP.						DATE	CHANGE NO.	APPROVAL	DATE	CHANGE NO.	APPROVAL	DEVELOPMENT NO.
BADGE	CARD ASM - A WORD					9-15-64	DEV 3961					S110006
GATE DRIVER						5-26-65	163132	B				5804996
DESIGN	N.I.S.	7-21-64	MODEL	2361 A		[illegible]	167350	B				
DETAIL	N.I.S.	7-21-64	SCALE			30 OCT 66	160759	C				
CHECK	[illegible]	9-8-64	DRAW									
APPRO	[illegible]	[illegible]	CHECK									

C

5804996