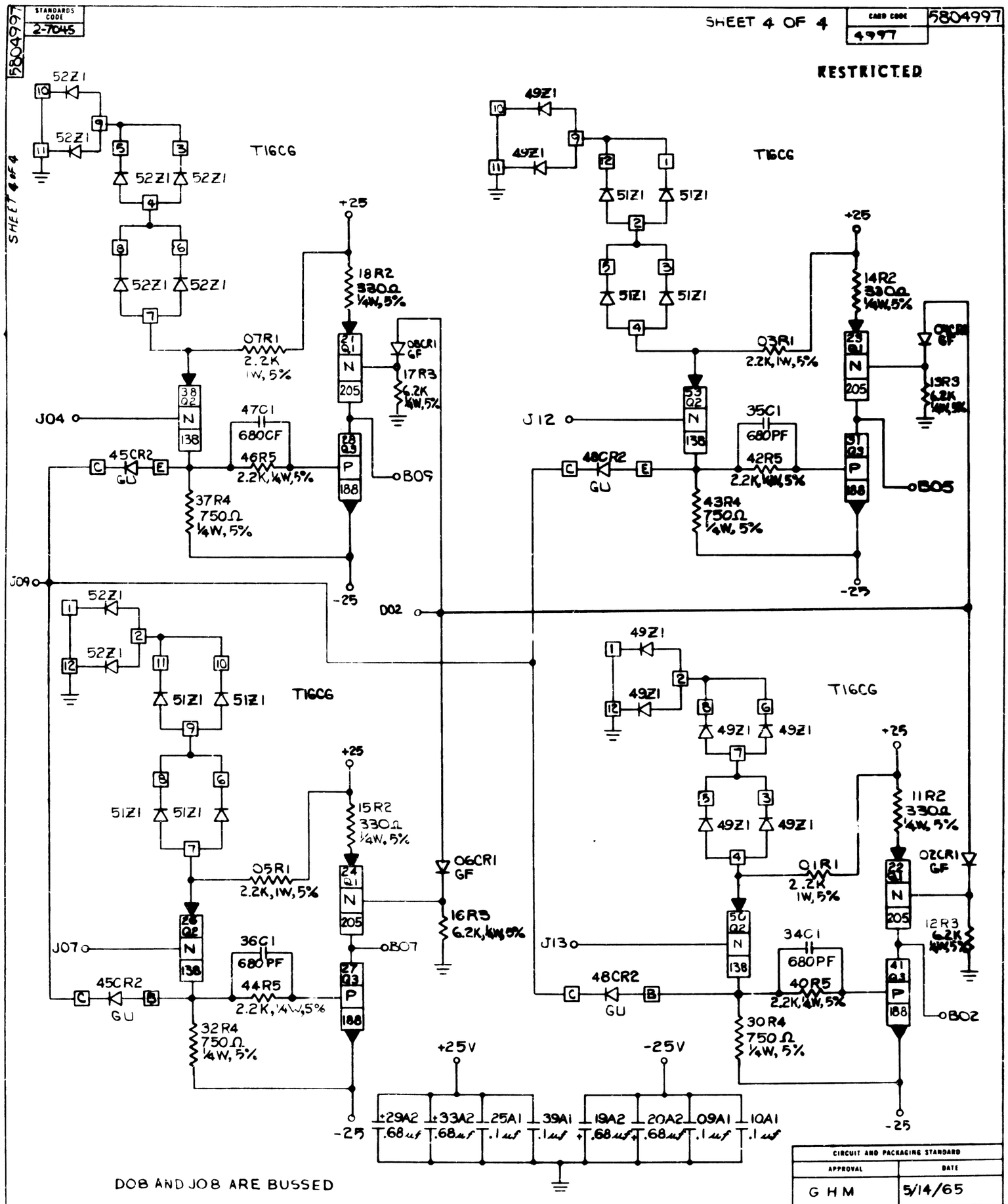
STANDARDS CODE 2-7045
SHEET 4 OF 4
CARD CODE 4997
5804997
RESTRICTED
T16CG
52Z1
51Z1
49Z1
+25
-25
18R2 330Ω ¼W, 5%
14R2 330Ω ¼W, 5%
15R2 330Ω ¼W, 5%
11R2 330Ω ¼W, 5%
07R1 2.2K 1W, 5%
03R1 2.2K, 1W, 5%
05R1 2.2K, 1W, 5%
01R1 2.2K 1W, 5%
08CR1 GF
17R3 6.2K ¼W, 5%
13R3 6.2K ¼W, 5%
06CR1 GF
16R3 6.2K, ¼W, 5%
02CR1 GF
12R3 6.2K ¼W, 5%
47C1 680CF
46R5 2.2K, ¼W, 5%
45CR2 GU
37R4 750Ω ¼W, 5%
35C1 680PF
42R5 2.2K, ¼W, 5%
48CR2 GU
43R4 750Ω ¼W, 5%
36C1 680PF
44R5 2.2K, ¼W, 5%
32R4 750Ω ¼W, 5%
34C1 680PF
40R5 2.2K, ¼W, 5%
30R4 750Ω ¼W, 5%
J04
J12
J09
J07
J13
B09
B05
B07
B02
D02
+25V
-25V
±29A2 .68µf
±33A2 .68µf
25A1 .1µf
39A1 .1µf
19A2 .68µf
20A2 .68µf
09A1 .1µf
10A1 .1µf
DOB AND JOB ARE BUSSED
CIRCUIT AND PACKAGING STANDARD
APPROVAL G H M
DATE 5/14/65
INTERNATIONAL BUSINESS MACHINES CORP.
NAME CARD ASM-B SWITCH GATE DRIVER
DESIGN NIS 1-28-64
DETAIL NIS 1-28-64
CHECK
APPRO
MODEL 2361A
SCALE
DRAW NIS 7-28-64
CHECK
DATE 9-4-64 1-19-65 10JUN65 1JUL65 19AUG65
CHANGE NO DEV3917 162211 164371 164638 164646
B C D
APPROVAL
DATE 4JAN66
CHANGE NO 166198 E
APPROVAL
DEVELOPMENT NO.
5804997
C