STANDARDS CODE 27045

5804998

SH. 5 OF 5

CARD CODE 4998 | 5804998

SHEET 5 OF 5

RESTRICTED

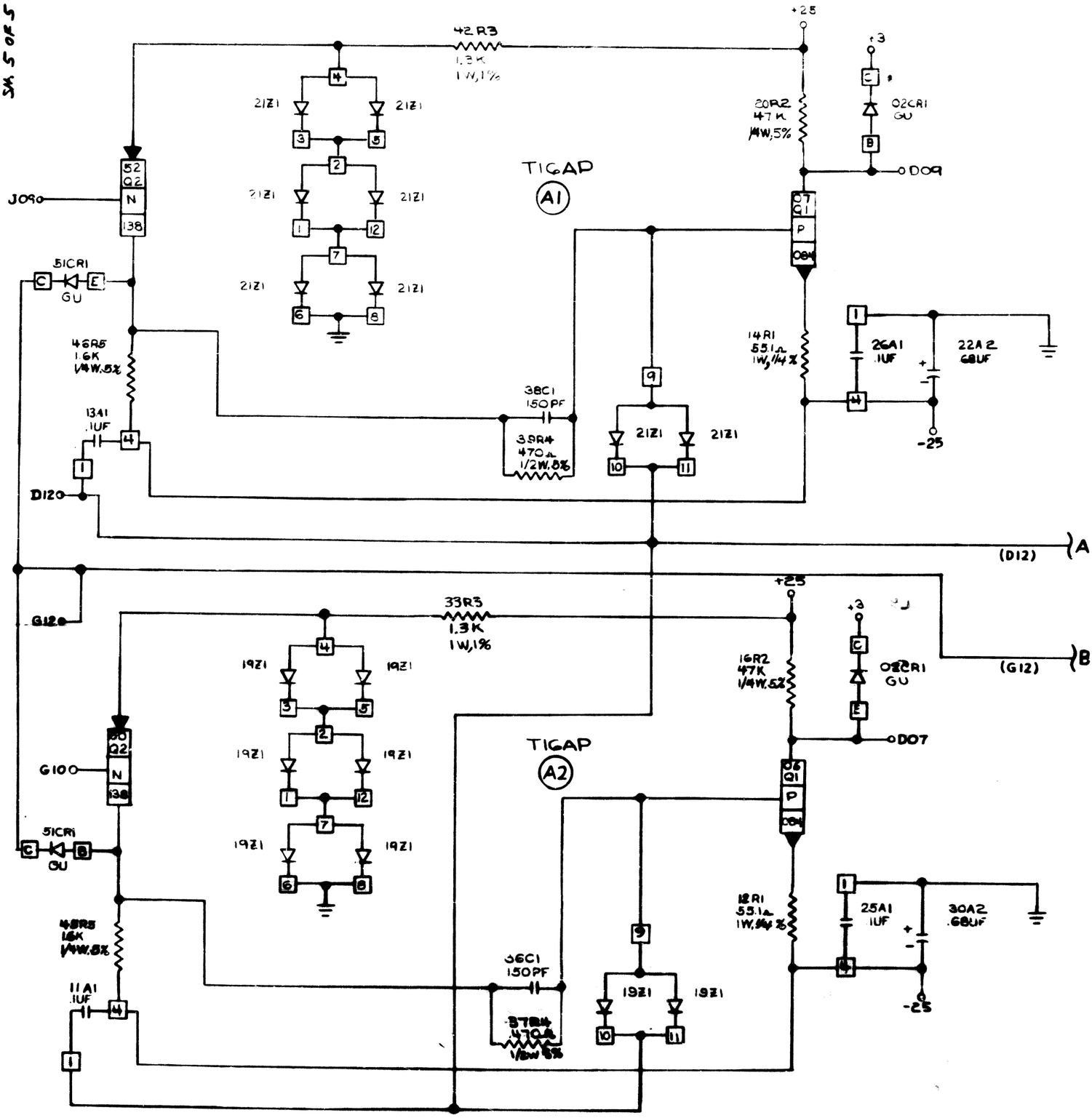

CIRCUIT AND PACKAGING STANDARD	
APPROVAL	DATE
RCBunder	2-2-65

	DATE	CHARGE NO.	APPROVAL	DATE	CHARGE NO.	APPROVAL	DEVELOPMENT NO.
CARRY-ONE ADDER AND COMPUTER	4-1-65	162089					5804998

C