0.002Hz TO 2MHz

FUNCTION GENERATOR

MODEL 5700 SERIAL NO. 368

OPERATING AND MAINTENANCE MANUAL

KROHN-HITE CORPORATION
580 Massachusetts Ave., Cambridge, Mass. 02139 U.S.A.

Service and Warranty

KROHN-HITE Instruments are designed and manufactured in accordance with sound engineering practices and should give long trouble-free service under normal operating conditions. If your Instrument fails to provide satisfactory service and you are unable to locate the source of trouble, contact our Representative if there is one in your area or write to our Service Department giving all the information available concerning the failure.

Do not return the instrument without our written authorization for, in most cases, we will be able to supply you with the information necessary to repair the instrument and thus avoid the transportation problems and costs. When it becomes necessary to return the instrument to our Factory, kindly pack it carefully and ship it to us via Railway Express, prepaid.

KROHN-HITE Instruments are conservatively designed to provide continuous reliable service under normal laboratory conditions. The material and workmanship in every new instrument manufactured by Krohn-Hite is guaranteed for one year from the date of shipment to the original purchaser. Any instrument developing defects during this period will be repaired or replaced without charge when the failure is the result of defective material or workmanship. This warranty does not apply to electron tubes, fuses, batteries, transistors and other semiconductor devices.

KROHN-HITE CORPORATION reserves the right to make design changes at any time without incurring any obligation to incorporate these changes in instruments previously purchased.

0.002Hz TO 2MHz

FUNCTION GENERATOR

MODEL 5700 SERIAL NO. 362

OPERATING AND MAINTENANCE MANUAL

KROHN-HITE CORPORATION
580 Massachusetts Ave., Cambridge, Mass. 02139 U.S.A.

© 1973 KROHN-HITE CORPORATION

CONTENTS

Section		Page
1	GENERAL DESCRIPTION	1
2	OPERATION	4
3	INCOMING ACCEPTANCE AND PERFORMANCE CHECK	6
4	CIRCUIT DESCRIPTION	8
5	MAINTENANCE	13
6	CALIBRATION	19

ILLUSTRATIONS

Figure		Page
1	Model 5700 Function Generator	ii
2	Simplified Schematic Diagram	8
3	Triangle Generator	9
4	Square Wave Generator	9
5	Sine Wave Shaper	10
6	Plus Output Amplifier	10
7	Minus Output Amplifier	11
8	Power Supply	11
APPENDIX		
	Schematic Diagram, PC Board Component Layout, Parts List	inside back cover

TABLE

Table		Page
1	Troubleshooting Chart	13

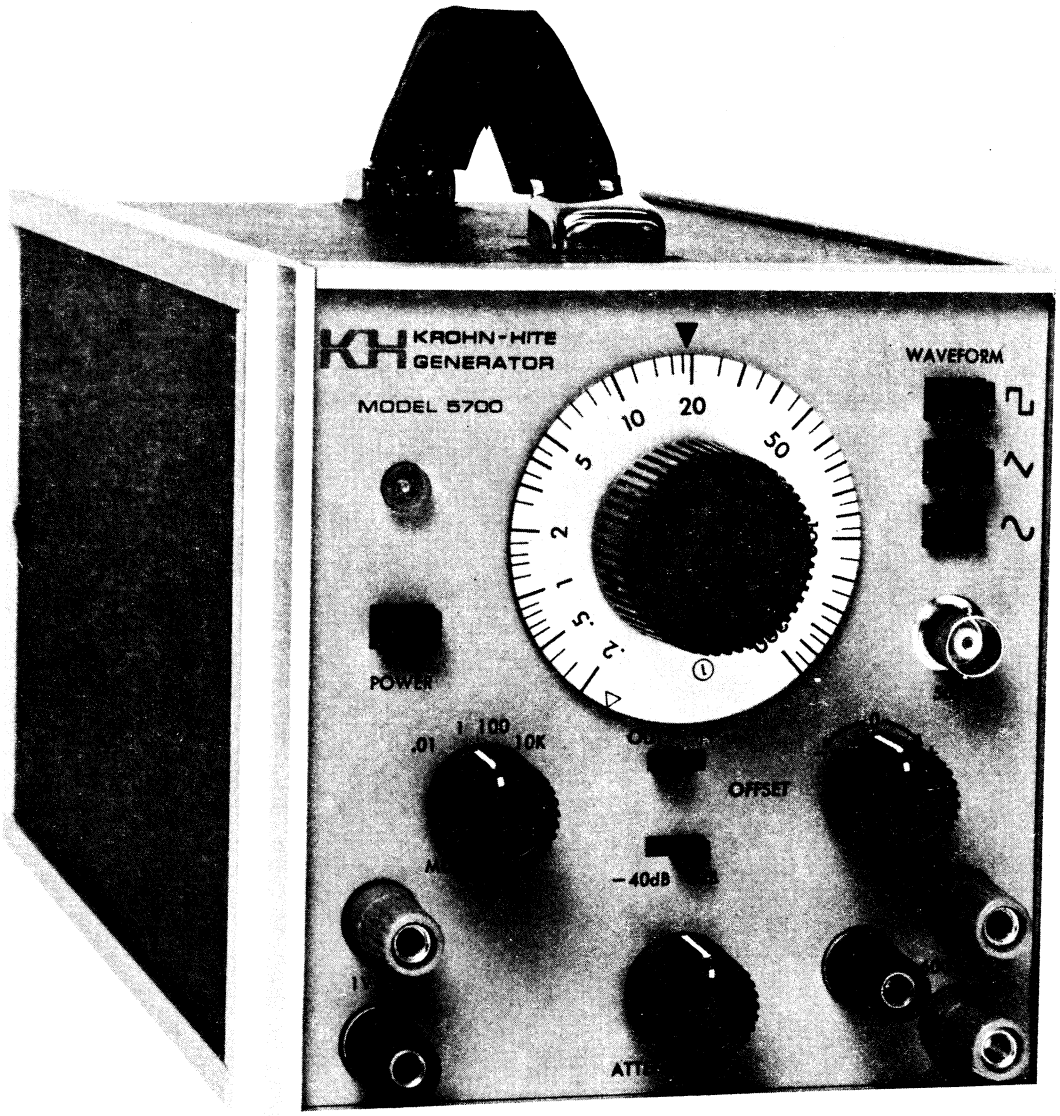

Figure 1. Model 5700 Function Generator

SECTION 1
GENERAL DESCRIPTION

1.1 INTRODUCTION

The Krohn-Hite Model 5700 Function Generator provides sine, square or triangle waveforms, over the frequency range of 0.002 Hz to 2 MHz. The frequency control dial is calibrated in Hertz from 0.2 to 200, permitting 1000:1 tuning. The 5700 provides a 50 ohm single ended, 15 volts p-p open circuit output, and simultaneously, a balanced 600 ohm, 30 volts p-p open circuit output. Both outputs are controlled by a two position attenuator, calibrated in 40 dB steps, with a separate infinite resolution vernier. An additional 1 volt p-p auxiliary square wave output is also provided on the 5700.

The function generator is carefully inspected, aged, and adjusted before shipment, and should be ready for operation when it is unpacked. If it appears to have been damaged in shipment, make a claim with the carrier and notify Krohn-Hite immediately.

1.2 SPECIFICATIONS

Waveforms

Sine, square, triangle.

Frequency Range

0.002 Hz to 2 MHz in 4 ranges.

Frequency Control

Single turn dial calibrated logarithmically from 0.2 to 200 in Hertz, and a 4 position multiplier providing a 1000:1 coverage in each multiplier position.

BAND	MULTIPLIER	FREQUENCY-RANGE (Hz)
1	0.01	0.002 - 2
2	1	0.2 - 200
3	100	20 - 20K
4	10K	2K - 2M

Frequency Accuracy

±3% at four dial calibration settings of 0.2, 5, 50, 200.
±15% maximum at other settings.

Frequency Stability

10 minutes	0.05%
24 hours	0.25%
Vs line	0.01% for 10% line change
Vs temperature	0.05%/°C (-10°C to 50°C) from 0.002 Hz to 100 KHz.

Time Symmetry

Sine, square, triangle, 99% from 0.002 Hz to 100 KHz.

Main Output

Waveforms: Sine, square, triangle.

Output Characteristics:

50 ohm output: 15 volts p-p open circuit; 7.5 volts p-p across 50 ohms.

300 ohm outputs: 15 volts p-p open circuit; 7.5 volts p-p across 300 ohms.

600 ohm balanced output: 30 volts p-p open circuit; 15 volts p-p across 600 ohms; balance greater than 60 dB to 20 KHz.

Isolation: Can be floated up to ±500 volts peak between outputs and instrument case.

Amplitude Stability (maximum amplitude):

10 minutes	0.02%
24 hours	0.1%

Amplitude Control: Two position attenuator, calibrated in 40 dB steps, with separate infinite vernier. Attenuator accuracy is ±0.2 dB. Minimum output is less than 3 millivolts.

DC Components: All waveforms are symmetrical about ground with nominal zero dc volts. At maximum output, drift is less than 5 millivolts /°C. Drift is reduced in proportion to output attenuator setting.

Frequency Response: Sine wave, less than 0.1 dB from 0.002 Hz to 200 KHz; 0.5 dB to 2 MHz.

Sine Wave Distortion: Less than 0.5% from 0.002 Hz to 100 KHz; 3% to 2 MHz.

Square Wave: Rise and fall time less than 50 ns; total aberrations less than 5% with 50 ohm termination.

Triangle Linearity: Greater than 99% from 0.002 Hz to 100 KHz; 95% to 2 MHz.

DC Offset: 0 to ±5 volts open circuit. Stability 5 millivolts /°C, reduced in proportion to attenuator setting. Maximum peak signal plus dc offset is ±7.5 volts.

Auxiliary Output

Fixed 1 volt p-p square wave. Impedance 200 ohms.

Operating Ambient Temperature Range

-10°C to 50°C.

Controls

Front panel contains frequency dial, frequency range multiplier, amplitude attenuator and vernier, main output waveform selector, dc offset, power switch. Rear panel contains line switch, symmetry adjust, dc level adjustments.

Terminals

Front panel only, BNC connector for the 50 ohm output. Binding posts for the 600 ohm balanced output and auxiliary output.

Power Requirements

107-127 or 214-254, single phase, 50-400 Hz, 3.5 watts.

Dimensions and Weights

5 1/2" (140 mm) wide, 6" (152 mm) high, 12" (305 mm) long; 7 lbs. (3.5 kg) net, 10 lbs. (5 kg) shipping.

SECTION 2
OPERATION

2.1 POWER REQUIREMENTS

The Model 5700 Function Generator may be used either with a 107-127 or 214-254 volt, 50-400 Hz line. The line voltage can be selected by operation of the line switch on the rear panel. All units are shipped with the line switch in the 117 volt position and a fuse bag attached to the line cord. The fuse bag contains a 1/16 ampere fuse. When 234 volt operation is required, replace the 1/8 ampere fuse with the 1/16 ampere fuse and switch the line switch to the 234 volt position.

2.2 OPERATING CONTROLS AND CONNECTORS

2.2.1 Front Panel Controls

POWER: A 1 position pushbutton switch for selecting OFF-ON, and a pilot light to indicate the ON condition.

FREQUENCY DIAL AND MULTIPLIER: Single turn dial, calibrated logarithmically from 0.2 to 200 to provide 1000:1 frequency coverage in each of the 4 multiplier switch positions, X0.01 to X10K.

WAVEFORM: 3 position pushbutton switch for selecting sine, square or triangle waveforms.

AMPLITUDE: 2 position attenuator switch for selecting 0 dB and -40 dB, and a separate infinite vernier for fine adjustment to an additional -60 dB. For low level signals, the output should be properly terminated.

DC OFFSET: Switch and potentiometer determines the dc offset of the 50 ohm and 600 ohm balanced output signals by up to ±5 volts open circuit. The dc offset, plus the ac signal, should not exceed ±7.5 volts peak, open circuit, or clipping will occur.

2.2.2 Rear Panel Controls

LINE: 2 position switch for selection of 117 or 234 volt operation.

SYM ADJ: Potentiometer for periodic adjustment of the waveform symmetry.

DC OUTPUT LEVELS: 2 potentiometers for periodic adjustment of the + and - dc output levels.

2.2.3 Connectors

50 OHM: The selected waveforms appear at this output. Impedance is 50 ohms.

600 OHM BALANCED: The selected waveforms appear at this output. Impedance across the two red binding posts is 600 ohms. Impedance across either red and black binding post is 300 ohms.

1 VOLT P-P: Fixed amplitude of 1 volt p-p square wave. Frequency is coincident with the 50 ohm and 600 ohm balanced outputs. Impedance is 200 ohms.

SECTION 3
INCOMING ACCEPTANCE AND PERFORMANCE CHECK

3.1 INTRODUCTION

The following procedure should be used to verify that the generator is operating within specifications, both for incoming inspection and for routine servicing. Tests must be made with all covers in place and the procedure given below should be followed in sequence. If a problem is encountered in the procedure that is given, refer to Calibration, Section 6.

3.2 EQUIPMENT REQUIRED

(a) Oscilloscope, with 1 mv/cm sensitivity and bandwidth of at least 45 MHz, Tektronix Type 7403N or equal, with 7B50 Time Base and 7A13 Differential Comparator.

(b) Frequency counter, capable of measuring 0.002 Hz to 2 MHz.

(c) Distortion meter, Hewlett Packard, Type 333A or equivalent.

(d) Voltmeter, capable of measuring 0 to 20 volts.

3.3 PROCEDURE

After allowing the instrument to warm up for 30 minutes, set the controls to the following positions:

POWER	AC Operation
FREQUENCY DIAL AND MULTIPLIER	20 X100
ATTENUATOR	0 dB, vernier Max. CW
WAVEFORM	Sine
DC OFFSET	Off

3.3.1 Waveforms

Connect the 50 ohm output of the generator to the oscilloscope. Operate the Waveform pushbutton switch in all positions to check for the presence of all waveforms. Return the switch to the sine wave position.

3.3.2 Attenuator

Rotate the Attenuator vernier to the max. CCW end. The signal should diminish by more than 60 dB. Rotate the vernier to the max. CW end. The output amplitude should be greater than 15 volts peak to peak. Connect the oscilloscope to the

600 ohm Balanced output. The output amplitude should be greater than 30 volts peak to peak. When operating the generator at a high frequency and the oscilloscope is connected to the 600 ohm balanced output, the oscilloscope should have a balanced input to prevent the waveforms from becoming distorted, because the outputs are floating from the chassis.

Operate the Attenuator switch, starting at 0 dB and going to -40 dB, reading the output amplitude with an acvm. The Attenuator accuracy is ±0.2 dB.

3.3.3 DC Output Levels

Set the Attenuator switch to the 0 dB position and the vernier to the max. CCW end. Connect the dcvm between the black and the upper 600 ohm red binding posts. It should be possible to set the level to zero by means of the +OUTPUT DC LEVEL potentiometer, located on the rear panel. Connect the dcvm between the black and the lower 600 ohm red binding posts. It should be possible to set the level to zero by means of the -OUTPUT DC LEVEL potentiometer, also located on the rear panel.

The output dc levels may change by approximately 10 millivolts when the Attenuator vernier is rotated to the CW end. Therefore, it may be necessary to readjust the + and - OUTPUT DC LEVEL potentiometers for zero volts at the desired Attenuator setting.

3.3.4 DC Offset

With the Attenuator vernier rotated to the CCW end, connect the dcvm to the 50 ohm output. Set the DC Offset switch to the IN position. The DC Offset control should be capable of offsetting the signal by ±5 volts, open circuit. Set the switch to the OFF position.

3.3.5 Frequency Accuracy

Set the Attenuator switch to 0 dB position, vernier to max. CW end. Connect the frequency counter to the 50 ohm output. The frequency accuracy should be ±3 percent at the dial settings of 0.2, 5, 50 and 200; ±15 percent maximum at other settings.

3.3.6 Distortion

With the Waveform switch set to sine, and the frequency set to 0.2 X10K, check the sine wave distortion using the distortion meter. Adjust the Symmetry Control on the rear panel for a distortion reading of less than 0.5 percent.

3.3.7 Auxiliary 1V P-P

Connect the oscilloscope to the 1V p-p Square Wave Output. Check that the square wave is present and is at least 1 volt peak to peak open circuit.

SECTION 4
CIRCUIT DESCRIPTION

4.1 SYSTEM OPERATION

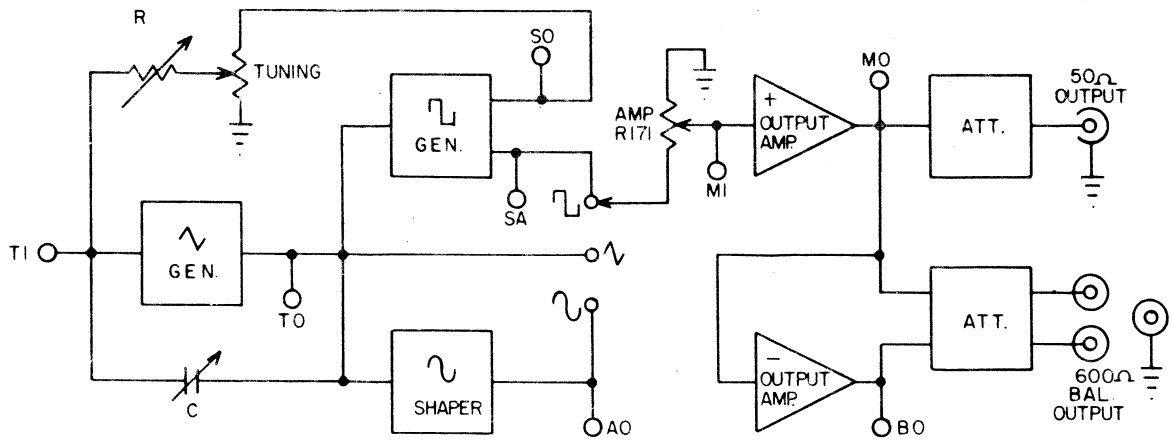

Figure 2. Simplified Schematic Diagram

A simplified schematic diagram of the function generator is shown in Figure 2. The basic oscillating system is comprised of a square wave generator and triangle generator, with the frequency controlled by the frequency dial potentiometer and the R and C multipliers. This system generates the square wave and the triangle wave, which is further processed to form the sine wave. The frequency control dial varies the amplitude of the square wave applied to the input of the triangle generator. The square wave is applied to the triangle generator input, through the network R, charging and discharging the integrating capacitor C in accordance with the time constant determined by the amplitude of the square wave, the R network, and the integrating capacitor. The output of the triangle generator is used as the input for the sine wave generator, and regeneratively as a trigger for the square wave generator. It is also fed directly to the waveform switch for the triangle function.

The output of the sine wave generator and the square wave generator are also both fed directly to the waveform switch for the sine and square functions. The square wave is attenuated and fed directly to the auxiliary output.

The + output amplifier inverts its input and provides the low impedance for the attenuator and 50 ohm output. The + output amplifier is also used as an input for the - output amplifier, which inverts its input, and simultaneously with the + output, they provide the signal for the attenuator and the balanced 600 ohm output.

4.2 TRIANGLE GENERATOR (See Figure 3)

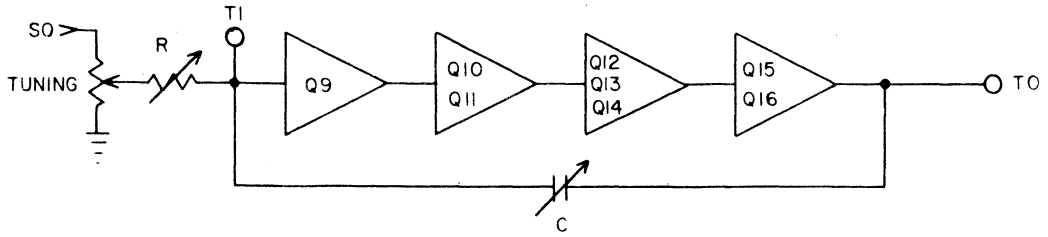

Figure 3. Triangle Generator

The triangle generator is an inverting infinite gain amplifier, with a feedback capacitor C to provide the integrating function. The triangle generator consists of an input stage, Q9, a second stage, Q10-Q11, an output amplifier stage, Q12-Q13-Q14, and an output emitter follower stage, Q15-Q16.

Q9B and Q10 form a high gain regenerative stage. The emitter follower driver, Q12, feeds the output amplifier stage, Q13-Q14. Q13-Q14 feed the two emitter follower transistors, Q15-Q16, which provides a low impedance triangle output. Capacitor C is selected by the bandswitch.

4.3 SQUARE WAVE GENERATOR (See Figure 4)

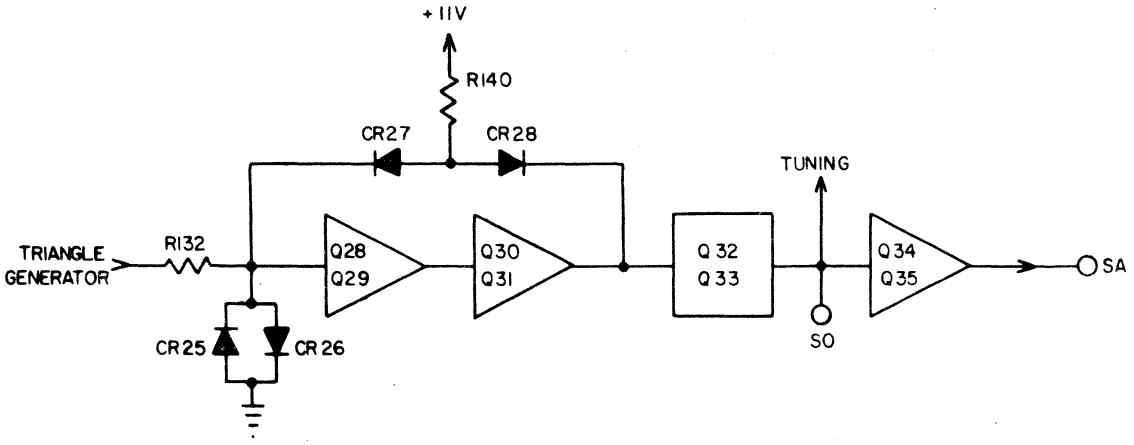

Figure 4. Square Wave Generator

The output of the triangle generator triggers the square wave generator. Differential amplifiers, Q28-Q29 and Q30-Q31, form a regenerative sense amplifier, with a feedback path from the collector of Q30, thru CR27 and CR28 to the base of Q28. When the peak of the triangle reaches -7.5 volts, Q28 conducts, turning on Q30, forward biasing diode CR28, reverse biasing CR27, and disconnecting R140 from the base of Q28. Q28 remains on as the triangle voltage goes from -7.5 to +7.5 volts. When the triangle reaches its positive peak of +7.5 volts, the base of Q28 goes positive, turning off Q28 and Q30, reverse biasing CR28, and connecting R140 to the base of Q28. The voltage at the base of Q28 is limited to plus or minus

0.6 volts by the action of CR25 and CR26. When the triangle again reaches -7.5 volts, the cycle repeats. The 1 V p-p square waves that are developed at the collector of Q31 and the collector divider of Q28 drive the switching transistors, Q32 and Q33. The collectors of Q32 and Q33 provide a 22 V p-p square wave for the tuning pot, the auxiliary square wave output divider, and the divider network to the emitter follower transistors, Q34-Q35, providing a low impedance square wave output with reduced amplitude.

4.4 SINE WAVE SHAPER (See Figure 5)

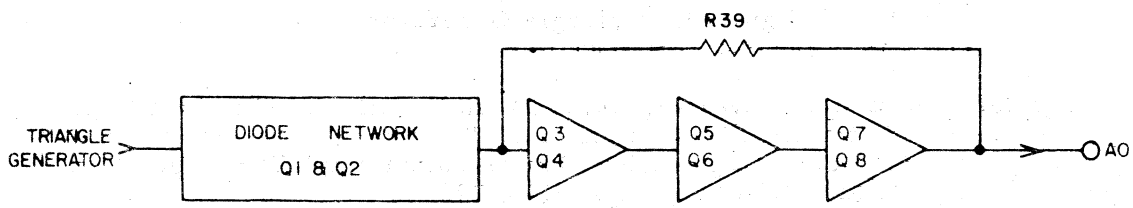

Figure 5. Sine Wave Shaper

The sine shaper consists of five pairs of diodes, each pair associated with a voltage divider. The function of the voltage divider is twofold: (1) it changes the slope of the input signal, and (2) it sets the level at which the diodes clip the signal. Thus when the triangle is applied to the circuit, the divider resistance changes its slope and the diodes clip it at five discrete increments within each 90 degrees. The resultant waveform approximates a sine wave. The main purpose of Q1 and Q2 is to provide the dc voltages to which the diodes clip. The thermal drift of Q1 and Q2 also cancels the thermal drift of the diodes. Potentiometers R20 and R21 are adjusted to minimize distortion. The output of the sine shaper is applied to the base of Q3 through the feedback network. The balanced input amplifier Q3-Q4 drives the second amplifier stage, Q5-Q6. Q5-Q6 drives the two emitter follower transistors, Q7-Q8, providing a low impedance sine wave output.

4.5 PLUS OUTPUT AMPLIFIER (See Figure 6)

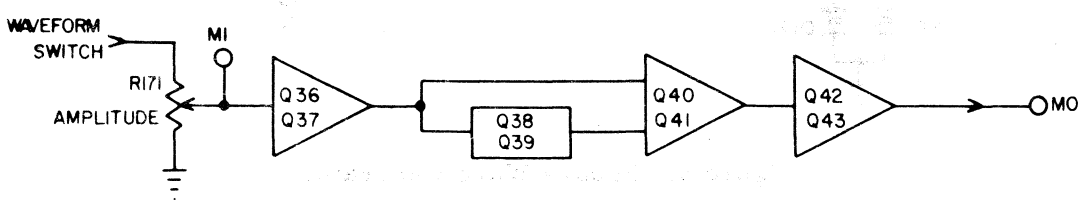

Figure 6. Plus Output Amplifier

The input signal for the plus output amplifier is controlled by the amplitude vernier R171, and is applied to the base of Q36. Q36-Q37 is a balanced input amplifier, which drives the output amplifier stages, Q40 and Q41 at low frequencies. At higher frequencies, additional drive signal is provided thru Q38-Q39 to Q40-Q41. Q40-Q41 feed the two emitter follower transistors, Q42-Q43, providing a low impedance source for the input of the minus output amplifier, and both the 50 ohm attenuator and the positive balanced 600 ohm attenuator.

4.6 MINUS OUTPUT AMPLIFIER (See Figure 7)

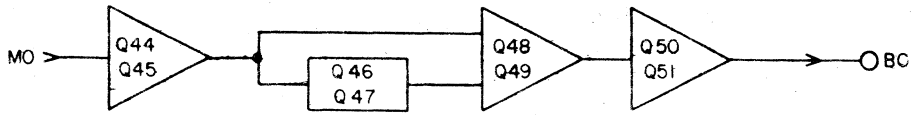

Figure 7. Minus Output Amplifier

The input signal level for the minus output amplifier is provided by the output of the plus output amplifier, and is applied to the base of Q44. Q44-Q45 is a balanced input amplifier, which drives the output amplifier stage, Q48 and Q49 at low frequencies. At higher frequencies, additional drive signal is provided thru Q46-Q47 to Q48-Q49. Q48-Q49 feed the two emitter follower transistors, Q50-Q51, providing a low impedance source for the negative balanced attenuator.

4.7 POWER SUPPLY (See Figure 8)

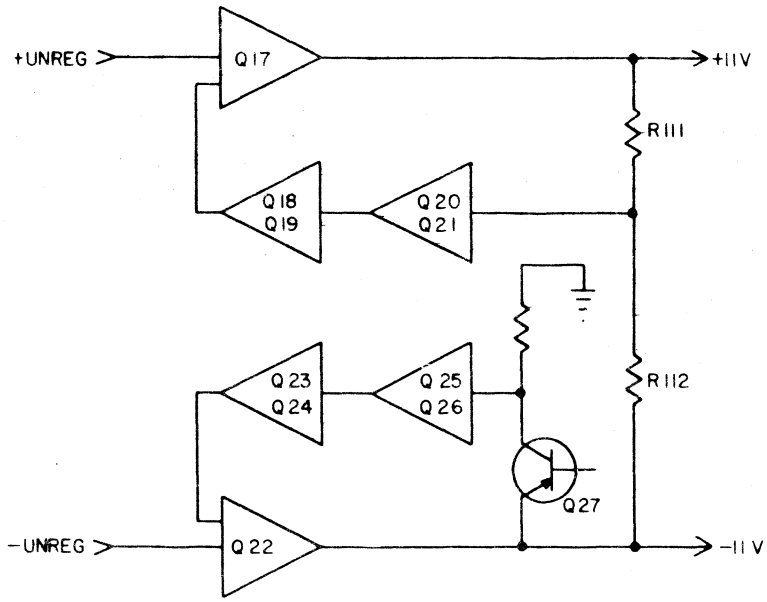

Figure 8. Power Supply

The power supply provides positive and negative 11 volts of regulated power to all circuits. Transistor Q27 is used as a 6.5 volt zener, and is the reference in the negative supply. Q27 determines the emitter voltage of the common emitter stage, Q25-Q26. Any change in the -11 volt supply is sensed by the base of Q26 through the reference zener Q27. Q25-Q26 drive the second common emitter stage Q23-Q24, driving the series regulator Q22. A short circuit in the minus supply will turn off Q23 and Q24, turning off Q22, thus providing short circuit protection.

The positive supply uses the -11 volt supply as a reference. Any change in the +11 volt supply is sensed at the base of Q21 through the divider R111-R112. Q20-Q21 drive the common emitter stage Q18-Q19, driving the series regulator Q17. A short circuit in the plus supply will turn off Q18 and Q19, turning off Q17, thus providing short circuit protection.

SECTION 5
MAINTENANCE

5.1 INTRODUCTION

If the generator is not functioning properly and requires service, the following procedure may facilitate locating the source of the trouble. Access to the interior of the generator is accomplished by removing the four screws centered at the rear of each cover; sliding off the side covers will unlock the top and bottom covers.

When a malfunction is detected, first check the line voltage and line fuse, and then make an inspection for broken wires, burnt or loose components, poor solder joints or similar conditions which could cause the trouble. Before beginning troubleshooting, it should be determined if the normal adjustments mentioned in the Calibration and Adjustment procedure, Section 6, will correct the trouble. Any troubleshooting of the generator will be greatly simplified if there is an understanding of the operation of the circuit: reference should be made to the Circuit Description, Section 5.

5.2 TROUBLESHOOTING PROCEDURE

Set the controls to the following positions:

POWER	On
FREQUENCY DIAL AND MULTIPLIER	200 X100
ATTENUATOR	0 dB, vernier Max. CW
WAVEFORM	Square
DC OFFSET	Off

Table 1 is provided to localize the defective circuitry:

Table 1. Troubleshooting Chart

Symptom	Check	Faulty Circuitry and/or Assoc. Comp.	Troubleshooting Section
1. (a) No signal at 50 ohm, Balanced 600 ohm or Auxiliary Output	Power Supply Voltages (-11V and +11V)		
(b) Power Supply Voltages Incorrect		Power Supply	5.3
(c) Power Supply Voltages Correct	Polarity at TI should be opposite that at TO		

Table 1. Troubleshooting Chart (Continued)

Symptom	Check	Faulty Circuitry and/or Assoc. Comp.	Troubleshooting Section
(d) If not Opposite		Triangle Generator	5.5
(e) If Opposite		Square Wave Generator	5.4
2. (a) No signal at 50 ohm or Balanced 600 ohm Output; Auxiliary Output Normal	Signal at input of + Output (7V p-p) Amplifier (MI)		
(b) MI signal Incorrect		Waveform Switch	
(c) MI signal Correct	Signal at MO (15V p-p)		
(d) MO signal Incorrect		+ Output Amplifier	5.7
(e) MO signal Correct		Attenuator	
3. (a) No signal at -600 ohm Output; + 600 ohm, 50 ohm and Auxiliary Outputs Normal	Signal at output of - Output Amplifier (BO) (15V p-p)		
(b) BO signal Incorrect		- Output Amplifier	5.8
(c) BO signal Correct		Attenuator	
4. (a) No Sine Wave Output at 50 ohm or Balanced 600 ohm Outputs; Triangle and Square Wave Outputs are Normal	Signal at AO (7V p-p)		
(b) AO Signal Correct		Waveform Switch	
(c) AO Signal Incorrect		Sine Wave Shaper	5.6

Table 1. Troubleshooting Chart (Continued)

Symptom	Check	Faulty Circuitry and/or Assoc. Comp.	Troubleshooting Section
5. Defective signal as Tuning Dial is turned to CW end		Triangle Generator (FET input stage Q9)	5.5
6. No Square Wave Output at 50 ohm output; Triangle at 50 ohm Output and Auxiliary Square Wave are normal		Q34 or Q35 are defective	5.4

5.3 POWER SUPPLY

Incorrect power supply voltages may be caused by excessive current being drawn by other parts of the circuit. If excessive current is being drawn, the most likely source of trouble would be the output stage of the Square Wave Generator Q32, Q33 or the output stage of the output amplifiers Q42, Q43 and Q50, Q51.

If the power supply is defective, the following procedure is recommended. Due to interaction (the position + 11V supply is slaved to the -11 volt supply), if both supplies are incorrect the most likely source of trouble will be the minus supply.

Normal voltages for various points are given on the Schematic Diagram.

At 117V (234V) line determine that the unregulated supplies are operating normally by measuring the + 18 and -18 on the emitters of Q17 and Q22 respectively. Normal ripple at these points will be 120 Hz (100 Hz for 50 Hz line frequency) and less than 1 volt peak to peak.

If the -11 volt supply is incorrect, measure the 6.5 volt collector to emitter zener voltage of Q27. If this is correct and the -11 volt supply measures less than -11 volts, the base of Q26 will measure less than the base of Q25. This should unbalance Q25 and Q26, making Q25 collector more positive and Q26 collector more negative. The base of Q23 will be more negative than the base of Q24 increasing the current in Q23 and turning on Q22, reducing its collector to emitter voltage to increase the -11 volt supply. If Q22 is open, R116 will provide enough current to hold the -11 volt supply at approximately -8 volts.

If the -11 volt supply measures greater than -11 volts, the unbalance in the first and second stage will be opposite, with Q23 being turned off, also turning off Q22, and increasing its collector to emitter voltage to reduce the -11 volt supply.

If the minus supply is correct and the + 11 volt supply measures less than + 11 volts, Q21 base will measure negative, unbalancing the collectors of Q20 and Q21, making the collector of Q21 more positive than the collector of Q20. This will increase the current in Q18 turning on Q17, minimizing its collector to emitter voltage. If Q17 is open, R104 will provide enough current to hold the + 11 volt supply at approximately + 8 volts.

If the + 11 volt supply measures greater than + 11 volts, Q21 base will measure positive, unbalancing the collectors of Q20 and Q21 making the collector of Q21 more negative, decreasing the current in Q18, turning off Q17 and increasing its collector to emitter voltage.

5.4 SQUARE WAVE GENERATOR

A defect in either the Triangle Generator or the Square Wave Generator will generally result in no output waveforms. If the sine and triangle are present at the 50 ohm output and the square wave is present at the auxiliary 1 volt output, the most likely source of trouble is Q34 or Q35. If the triangle is not present at the triangle output TO, and a high frequency oscillation is observed at the square wave output SO, diode CR27 or CR28 may be open. If the waveforms are not present and the square wave output voltage at SO measures either plus or minus 10.6 volts, and is the same polarity as TO, the Square Wave Generator is functioning properly and the most likely source of trouble is the Triangle Generator. Before any troubleshooting is performed on the Square Wave Generator it should be determined that the power supplies are functioning properly.

If it is determined the Square Wave Generator is faulty, the voltage from base to emitter of Q32 should be no greater than +0.7 volts, and the voltage from base to emitter of Q33 should be no greater than-0.7 volts. If SO is approximately zero, and Q32 and Q33 are functioning properly, the voltage across R148 and R153 will be equal. If either Q32 or Q33 are found to be defective it is recommended that both be replaced. An unbalance in the bases of Q30 and Q31 will cause their collectors to be unbalanced, causing the transistor with the more positive base voltage to have a more negative collector voltage. An incorrect measurement can be caused by a defect in either transistor. To determine if the first stage is functioning correctly, for a positive 0.6 volts on the base of Q28, the collector of Q28 will measure more negative than the collector of Q29. For a negative 0.6 volts on the base of Q28, the collector of Q28 will measure more positive than the collector of Q29. An incorrect measurement may be caused by a defect in either Q28 or Q29. If the polarity of TO and the base of Q28 are opposite, the most likely source of trouble is a shorted diode CR27 or CR28.

5.5 TRIANGLE GENERATOR

If the generator is not functioning, the trouble can be localized to the Triangle Generator in the following manner. Set the tuning dial for maximum frequency (ccw). Note the polarity of the voltage at the Triangle Generator input, TI, and compare it with the voltage at the triangle output TO. If the Triangle Generator is functioning properly the output will be of opposite polarity to the input and greater than ±7.5 volts. If the Triangle Generator is functioning properly the most likely source of trouble is the Square Wave Generator. If it is determined the Triangle Generator is defective, the following procedure is recommended. If the measurements deviate by more than 20% from the values given, the associated transistor is probably defective.

The voltage from base to emitter of Q15 should be no greater than -0.7 volts and the voltage from base to emitter of Q16 should be no greater than 0.7 volts. With the junction of CR17 and CR18 (point C) connected to signal ground the drop across R87 and R88 should be equal and approximately 0.2 volts.

The base to emitter voltage of Q13 should be no greater than 0.6 volts, and the base to emitter voltage of Q14 should be no greater than -0.6 volts. If Q13 and Q14 are functioning properly, the drop across R83 and R86 will be equal.

The base to emitter voltage of Q12 should be no greater than -0.6 volts and the voltage drop across R76 and R78 should be equal.

If stages Q12 thru Q16 are functioning properly, the output, TO, will be positive if the collector of Q11 is more negative than -8.8 volts, and TO will be negative if Q11 collector is more positive than -8.8 volts.

The collector of Q11 will be more positive than -8.8 volts if Q11 base is more negative than Q10 base and more negative than -8.8 volts if Q11 base is more positive. An incorrect reading can be caused by a defect in either Q10 or Q11.

If TI is negative, D2 of Q9 will be more negative than D1. If TI is positive, D2 will be more positive than D1.

If Q9 is replaced, it may be necessary to readjust the symmetry in the following manner: Set the Waveform switch to the Triangle position, with the Multiplier set to 10K position. Rotate the Attenuator Vernier control to the max, CW end. Connect the DVM to the center arm of the SYM. ADJ. potentiometer, R65, located on the rear panel. Adjust the dc level for 0 ±1 volt with the SYM. ADJ. potentiometer. Connect the oscilloscope to the 50 ohm Output and set the Frequency Dial to approximately 1. Adjust R71 until the waveform is as symmetrical as possible. R71 may be wired to either +11V or -11V. Set the Frequency Dial to the max. CW end. Adjust R72 until the waveform is as symmetrical as possible. R72 may be wired to either +11V or -11V.

5.6 SINE WAVE SHAPER

A malfunction of the Sine Wave Shaper may be localized to the Sine Wave Shaper by observing the presence at the main output of a triangle and square wave and either no sine wave or a distorted sine wave. A defective diode CR1 thru CR10 or resistance divider R1 thru R10 in the shaping circuit will usually produce a distorted output with minimum dc offset at AO. A faulty component in the amplifier circuit will generally produce a dc offset at AO and may be localized with the following procedure. If the voltages given deviate by more than 20% from the values the most likely source of failure is the associated transistor.

Base to emitter voltage of Q7 should be no greater than -0.7 volts, and the base to emitter voltage of Q8 should be no greater than 0.7 volts. With the junction of CR15 and CR16 (point E) connected to signal ground, the voltage across R37 and R38 will be equal.

The base to emitter voltage of Q5 should be no greater than 0.6 volts, and the base to emitter voltage of Q6 should be no greater than -0.6 volts. An open collector in either Q5 or Q6 will make the voltage across both R35 and R36 less than 1 volt.

If the stages Q5 thru Q8 are functioning properly the collector of Q4 should measure less than 9.4 volts if AO is negative and greater than 9.4 volts if AO is positive. An incorrect measurement at Q4 collector may be caused by a defect in either Q3 or Q4.

Q1 base to emitter voltage should be no greater than -0.65 volts, and Q2 base to emitter voltage should be no greater than 0.65 volts. The voltage across R11 and R13 will be equal.

5.7 + OUTPUT AMPLIFIER

If the square wave is present at the auxiliary 1V p-p output, and the sine, square and triangle waveforms are not present at the main 50 ohm output the most likely source of trouble is the + Output Amplifier, and the following procedure is recommended. If the voltages deviate by more than 20% from the values given, the associated transistor is probably defective.

Turn the Amplitude control to maximum ccw position and switch the DC Offset control Out. Base to emitter voltage of Q42 should be no greater than -0.7 volts,

and the base to emitter voltage of Q43 should be no greater than 0.7 volts. With the junction of CR31 and CR32 (point F) connected to signal ground the voltage drop across R196 and R199 will be equal and approximately 0.1 volts.

Base to emitter voltage of Q41 should be no greater than -0.6 volts, and the base to emitter voltage of Q40 should be no greater than 0.6 volts. An open collector in either Q40 or Q41 will make the voltage across both R190 and R192 less than 1 volt.

The base to emitter voltage of Q38 should be no greater than -0.6 volts and the base to emitter voltage of Q39 should be no greater than 0.6 volts.

If the output stages are functioning normally and MO is negative, the collector of Q37 should measure less than 3.9 volts. If MO is positive, the collector of Q37 should measure greater than 3.9 volts. An incorrect measurement at the collector of Q37 can be caused by a defective Q37 or Q36. The feedback will cause the same polarity offset at the base of Q36 as appears at the output.

5.8 - OUTPUT AMPLIFIER

If the waveforms are present at the 50 ohm output and the + output of the balanced output terminal but not present at the - output terminal of the balanced output the most likely source of trouble is the - Output Amplifier, and the following procedure is recommended. If the voltages deviate by more than 20% from the values given, the associated transistor is probably defective.

Turn the Amplitude control to maximum ccw position and switch the DC Offset control Out. The base to emitter voltage of Q50 should be no greater than -0.7 volts, and the base to emitter voltage of Q51 should be no greater than 0.7 volts. With the junction of CR33 and CR34 (point D) connected to signal ground, the voltage drop across R242 and R245 will be equal and approximately 0.1 volts.

The base to emitter voltage of Q49 should be no greater than -0.6 volts, and the base to emitter voltage of Q48 should be no greater than 0.6 volts. An open collector in either Q48 or Q49 will make the voltage across both R237 and R238 less than 1 volt.

The base to emitter voltage of Q46 should be no greater than -0.6 volts, and the base to emitter voltage of Q47 should be no greater than 0.6 volts.

If the output stages are functioning normally and BO is negative, the collector of Q45 should measure less than 3.9 volts. If BO is positive, the collector of Q45 should measure greater than 3.9 volts. An incorrect measurement at the collector of Q45 can be caused by a defective Q45 or Q44. The feedback will cause the same polarity offset at the base of Q44 as appears at the output.

SECTION 6
CALIBRATION

6.1 INTRODUCTION

Before attempting to calibrate the instrument, refer to Section 3, Incoming Acceptance and Performance Check to determine if the unit is operating within specifications.

The following procedure is provided for the calibration and ajustment of the generator in the field, and adherence to this procedure should restore the generator to its performance specifications. If the generator cannot be calibrated by the procedure given refer to Maintenance, Section 5, or consult our Factory Service Department.

6.2 TEST EQUIPMENT REQUIRED

(a) Oscilloscope, with 1 mv/cm sensitivity and a bandwidth of at least 45 MHz, Tektronix Type 7403N or equal, with 7B50 Time Base and 7A13 Differential Comparator.

(a) Frequency counter, capable of measuring 0.002 Hz to 2 MHz.

(c) Distortion meter, Hewlett Packard Type 333A or equivalent.

(d) Voltmeter, capable of measuring 0 to 20 volts.

6.3 INITIAL OPERATION

After allowing the instrument to warm up for 30 minutes, set the controls to the following positions:

POWER	ON
FREQUENCY DIAL AND MULTIPLIER	200 X100
ATTENUATOR	0 dB, vernier Max. CCW
WAVEFORM	Square Wave
DC OFFSET	Off

6.4 POWER SUPPLY

Connect the DVM to -11 Volt testpoint with ground lead connected to the black binding post, and measure the voltage. Tolerance is -11.00 to -11.02 volts. If off adjust potentiometer R118, -11V ADJ.

6.5 OUTPUT DC LEVELS

Connect the DVM to the upper 600 ohm red binding post. Adjust the output level to 0 ±5 millivolts by means of the + OUTPUT DC LEVEL potentiometer, R173, located on the rear panel. Connect the DVM to the lower 600 ohm red binding post. Adjust the output level to 0 ±5 millivolts by means of the -OUTPUT DC LEVEL potentiometer, R220, also located on the rear panel.

6.6 SQUARE WAVE DC LEVEL

Connect the DVM to the SA testpoint and measure the dc voltage. If the voltage exceeds +0.05 volts, trim R154B, or if the voltage exceeds -0.05 volts, trim R155B.

6.7 TRIANGLE DC LEVEL

Set the Waveform switch to the Triangle position. Connect the DVM to the TO testpoint and adjust the TO dc voltage to 0.±5 millivolts by means of the potentiometer, R130.

6.8 SINE WAVE DC LEVEL

Set the Waveform switch to the Sine Wave position. Connect the DVM to the AO testpoint and adjust the AO dc voltage to 0 ±10 millivolts by means of the potentiometer, R24.

6.9 FREQUENCY CALIBRATION

Set the Multiplier switch to the X100 position. Tune the Frequency Dial to the max. CW end; check that both Dial knob set screws are tightened securely and that the Dial Δ is aligned with the index on the panel. Connect the Frequency Counter to the 1V p-p output and use the following procedure to calibrate the generator:

Step No.	Frequency Setting		Adj. No.	Tolerance
1	20 KHz	(200 X100)	R50	19.8 KHz - 20.2 KHz
2	20 Hz	(0.2 X100)	R164	19.8 Hz - 20.2 Hz
3	500 Hz	(5 X100)	R161	495 Hz - 505 Hz
4	5 KHz	(50 X100)	R162	4.95 KHz - 5.05 KHz
(Recheck steps 1-4)				
5	2 KHz	(0.2 X10K)	R54	1.98 KHz - 2.02 KHz
6	2 MHz	(200 X10K)	C50	1.99 MHz - 2.01 MHz
7	200 Hz	(200 X1)	R57	198 Hz - 202 Hz
8	2 Hz	(200 X.01)	R52	1.98 Hz - 2.02 Hz

6.10 SINE WAVE DISTORTION

Connect the 50 ohm output to the Distortion Analyzer; Waveform switch to the sine position, frequency set to 20 X100. Set the Distortion Analyzer to 2 KHz and adjust for a null. Adjust potentiometer R20 and R21 for minimum distortion. Recheck TO and AO dc levels. If off, readjust and recheck the distortion. Set the frequency to 0.2 X10K. Adjust the SYM. ADJ. potentiometer, R65, located on the rear panel, for minimum distortion.

6.11 SQUARE WAVE ADJUSTMENT

Set the Waveform switch to the Square Wave position, and frequency to 20 X10K. Connect the oscilloscope between the black and upper red binding post, and adjust C60 for minimum droop and overshoot. Connect the oscilloscope between the black and lower red binding post, and adjust C80 for minimum droop and overshoot.

6.12 SINE WAVE FREQUENCY RESPONSE

Set the Waveform switch to the Sine Wave position, and connect the oscilloscope to the 50 ohm output. Adjust C10 so that the amplitude remains constant as the dial is tuned from 0.2 to 200.

MODEL 5700

The following modifications and corrections are not reflected on the parts list and schematic dated 9/12/73, but may be added at the discretion of the customer.

Change Order No.	Modifications and Corrections
P.C. Diagram	PC561: interchange R157 & R151, R156 & R150. R63 should read R64; R62 should read R63; R64 should read R62.
Schematic	Voltages on collectors of Q25 and Q26 should read" -5.8 ".
3481	

Change	From	To
R111A	10.066K,1/8W,0.1%	10K,1/8W, 1%
R112A	10.066K,1/8W,0.1%	10K,1/8W, 1%
R132	7.19K,1/8W,0.1%	7.15K,1/8W, 1%
R146	495 ohm, 1/8W,0.5%	499 ohm, 1/8W,1%
R32	495 ohm, 1/8W,0.5%	499 ohm, 1/8W,1%
R221	10.066K, 1/8W,0.1%	10K, 1/8W,1%
R224	10.066K,1/8W, 0.1%	10K, 1/8W,1%
R202	49.9 ohm,1/2W,0.25%	49.9 ohm, 1/2W,1%
R203	30K, 1/8W, 0.1%	30.1K,1/8W,1%
R205	"	"
R204	301 ohm,1/4W,0.5%	301 ohm,1/4W,1%
R206	"	"

3519

Add R42, 10 ohm, 1/4W,10% in series with emitter of Q7.
Add R43, 10 ohm, 1/4W, 10% in series with emitter of Q8.
Add R97, 10 ohm, 1/4W, 10% in series with emitter of Q15.
Add R98, 10 ohm, 1/4W, 10% in series with emitter of Q16.
Change C89 and C90 from 6.8pf, 10% to 4.7pf, 10%
Change R196, R199, R242, R245 from 22 ohm, 1/4W 10% to 10 ohm, 1/4W, 10%.
Change R197, R198, R243, R244 from 4.7 ohm, 1/4W 10% to 10 ohm, 1/4W, 10%
Delete R131.
Change R133 from 330K, 1/4W,10% to 100K, 1/4W, 10%
Change Q40 and Q48 from MPS6518 to 2N5087.
Change R66 from 3.3 meg, 1/4W, 10% to 1meg, 1/4W 10%.

Publications Dept.
January 18, 1974

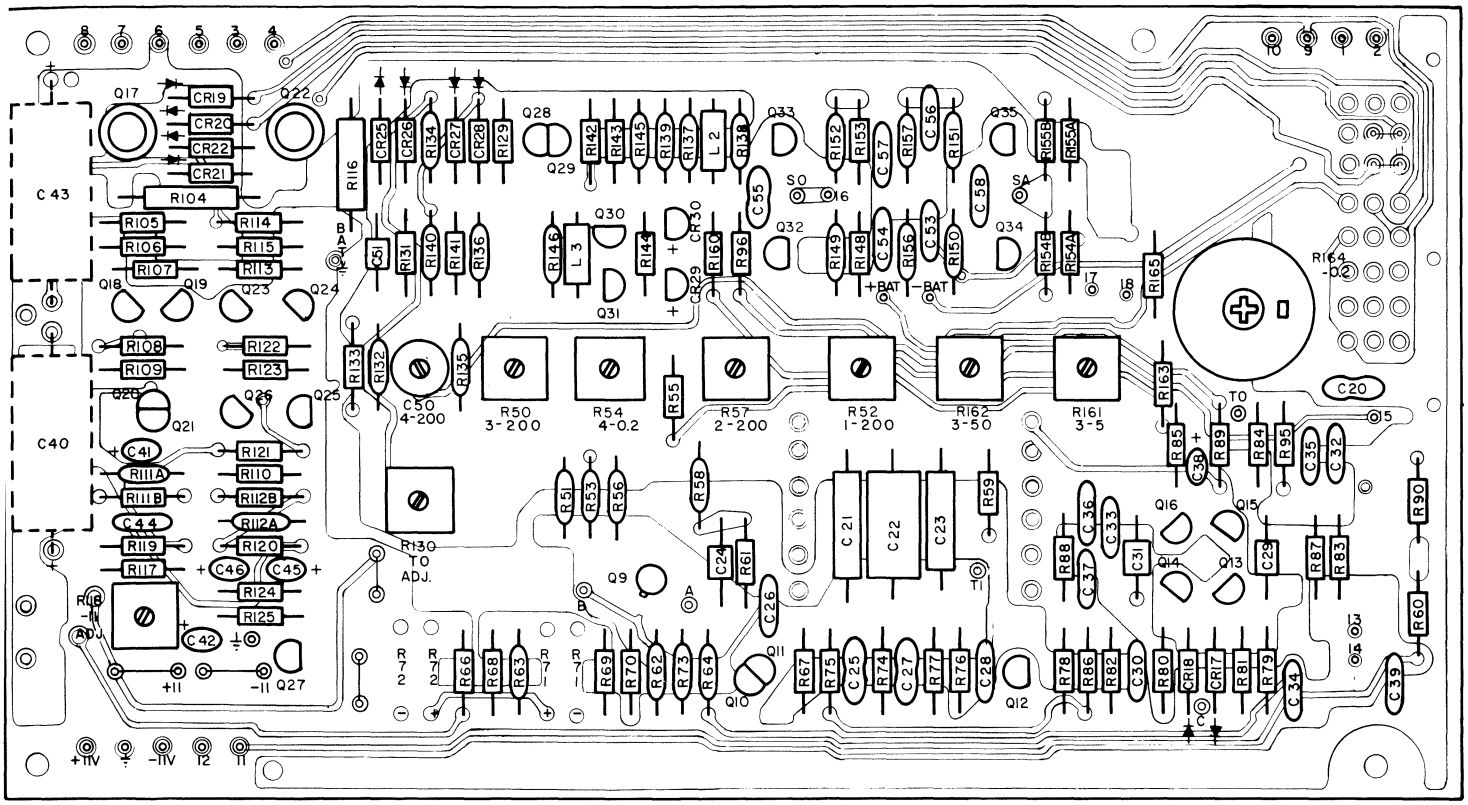

MODEL 5700 PC 561

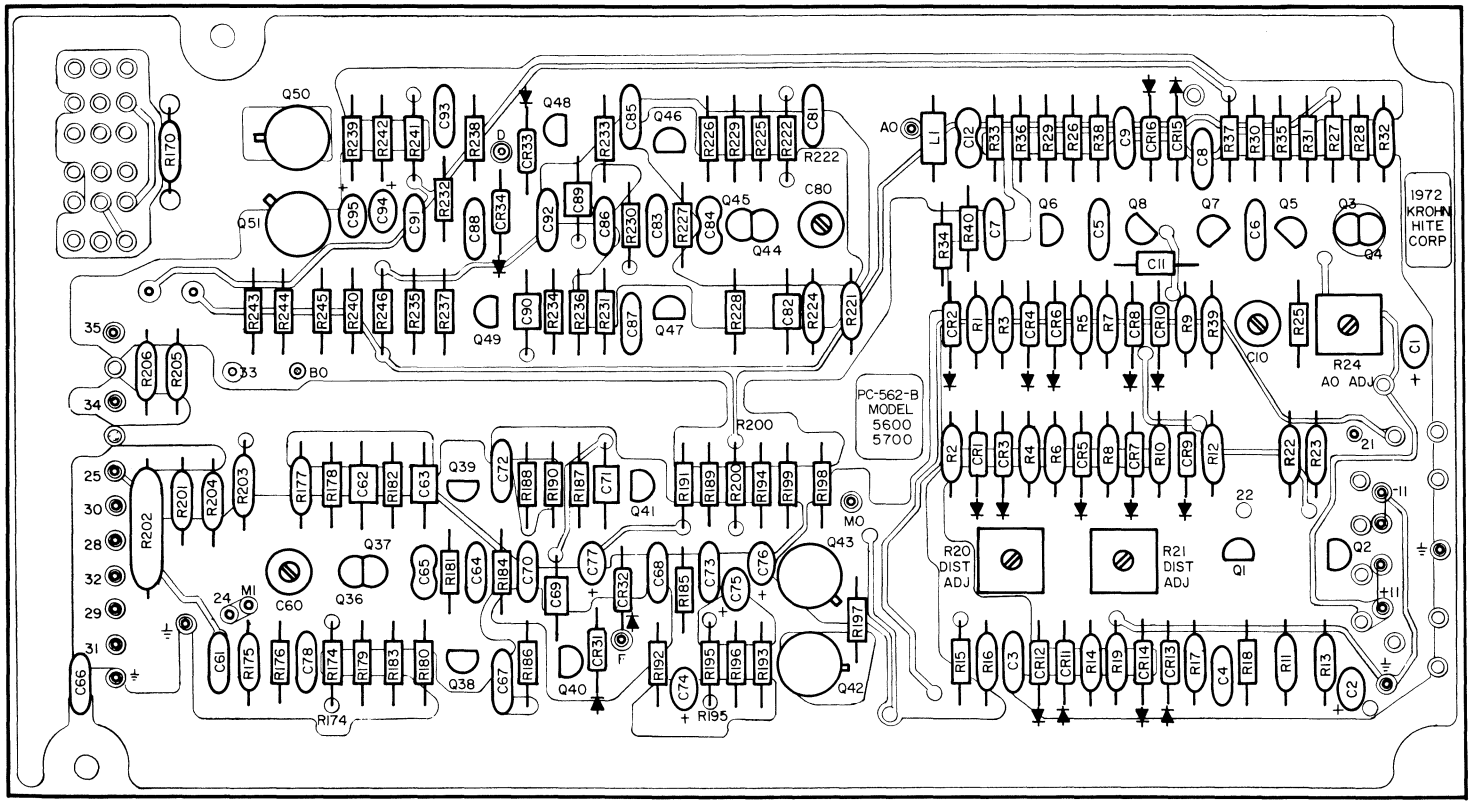

MODEL 5700 PC562

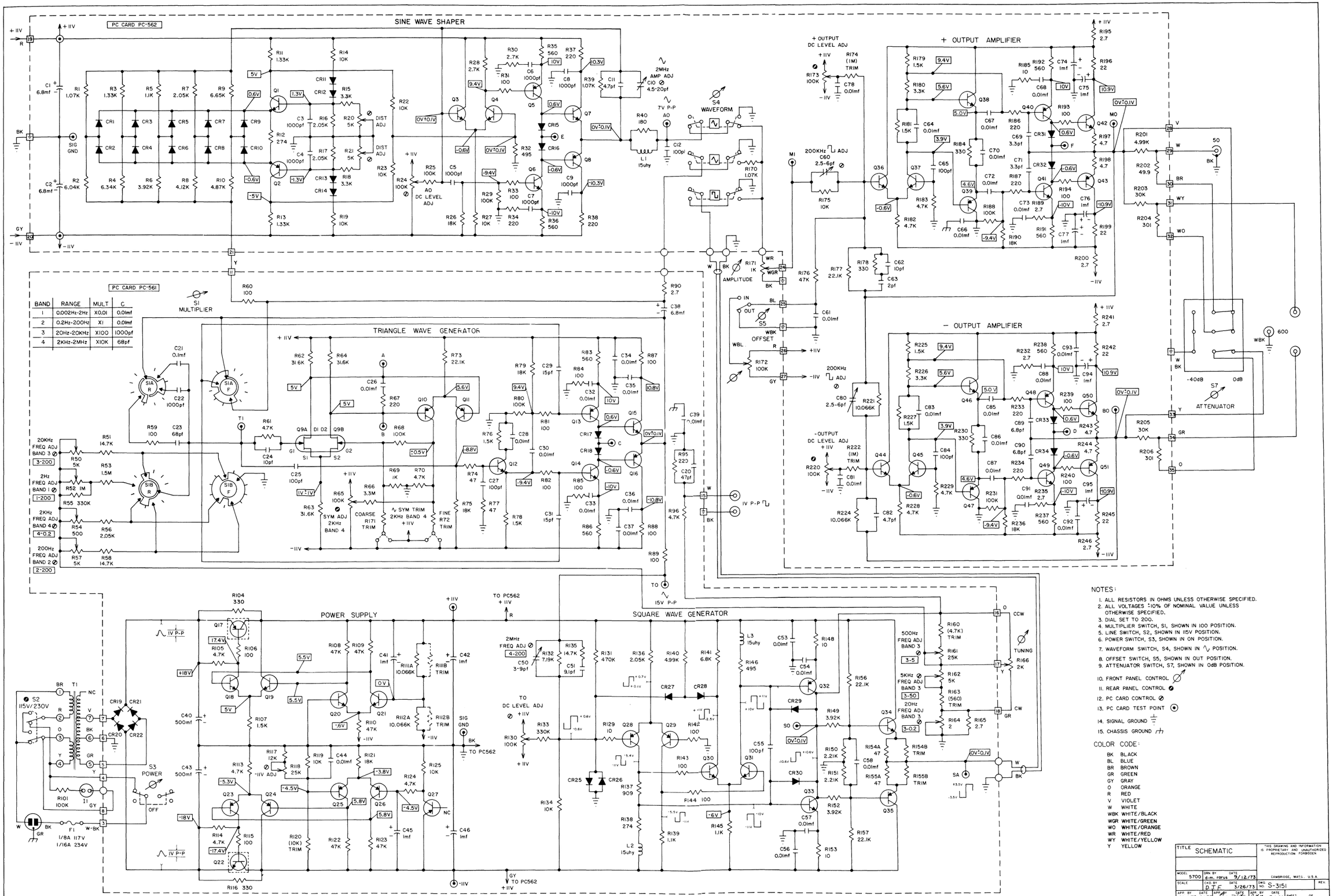
SINE WAVE SHAPER
PC CARD PC-562
+ OUTPUT AMPLIFIER
- OUTPUT AMPLIFIER
PC CARD PC-561
TRIANGLE WAVE GENERATOR
POWER SUPPLY
SQUARE WAVE GENERATOR
S1 MULTIPLIER
S4 WAVEFORM
S5 OFFSET
S7 ATTENUATOR
S3 POWER
S2 115V/230V
2MHz AMP ADJ
AMPLITUDE
SIG GND
TO PC562
TUNING
NOTES:
1. ALL RESISTORS IN OHMS UNLESS OTHERWISE SPECIFIED.
2. ALL VOLTAGES ±10% OF NOMINAL VALUE UNLESS OTHERWISE SPECIFIED.
3. DIAL SET TO 200.
4. MULTIPLIER SWITCH, S1, SHOWN IN 100 POSITION.
5. LINE SWITCH, S2, SHOWN IN 115V POSITION.
6. POWER SWITCH, S3, SHOWN IN ON POSITION.
7. WAVEFORM SWITCH, S4, SHOWN IN ∿ POSITION.
8. OFFSET SWITCH, S5, SHOWN IN OUT POSITION.
9. ATTENUATOR SWITCH, S7, SHOWN IN 0dB POSITION.
10. FRONT PANEL CONTROL
11. REAR PANEL CONTROL
12. PC CARD CONTROL
13. PC CARD TEST POINT
14. SIGNAL GROUND
15. CHASSIS GROUND
COLOR CODE:
BK BLACK
BL BLUE
BR BROWN
GR GREEN
GY GRAY
O ORANGE
R RED
V VIOLET
W WHITE
WBK WHITE/BLACK
WGR WHITE/GREEN
WO WHITE/ORANGE
WR WHITE/RED
WY WHITE/YELLOW
Y YELLOW
TITLE SCHEMATIC
THIS DRAWING AND INFORMATION IS PROPRIETARY AND UNAUTHORIZED REPRODUCTION FORBIDDEN
MODEL 5700
DRN BY d.m. rarus
DATE 9/12/73
CAMBRIDGE, MASS., U.S.A.
SCALE
CKD BY D.T.F.
DATE 3/26/73
DWG NO. S-3151
REV.
APP. BY WELLER
DATE 3-1-73
SHEET
OF

RESISTORS

Symbol	Description			Mfr.	Part No.
R1	1.07K	1%	1/8W	KH	M3-T1-1.07K
R2	6.04K	1%	1/4W	KH	M4-T1-6.04K
R3	1.33K	1%	1/8W	KH	M3-T1-1.33K
R4	6.34K	1%	1/8W	KH	M3-T1-6.34K
R5	1.1K	1%	1/8W	KH	M3-T1-1.1K
R6	3.92K	1%	1/8W	KH	M3-T1-3.92K
R7	2.05K	1%	1/8W	KH	M3-T1-2.05K
R8	4.12K	1%	1/8W	KH	M3-T1-4.12K
R9	6.65K	1%	1/8W	KH	M3-T1-6.65K
R10	4.87K	1%	1/8W	KH	M3-T1-4.87K
R11	1.33K	1%	1/8W	KH	M3-T1-1.33K
R12	274	1%	1/8W	KH	M3-T1-274
R13	1.33K	1%	1/8W	KH	M3-T1-1.33K
R14	10K	1%	1/8W	KH	M3-T1-10K
R15	3.3K	10%	1/4W	AB	CB3321
R16	2.05K	1%	1/8W	KH	M3-T1-2.05K
R17	2.05K	1%	1/8W	KH	M3-T1-2.05K
R18	3.3K	10%	1/4W	AB	CB3321
R19	10K	1%	1/8W	KH	M3-T1-10K
R20	5K POT			BKM	72PM
R21	5K POT			BKM	72PM
R22	10K	1%	1/8W	KH	M3-T1-10K
R23	10K	1%	1/8W	KH	M3-T1-10K
R24	100K POT			BKM	72PM
R25	100K	10%	1/4W	AB	CB1041
R26	18K	10%	1/4W	AB	CB1831
R27	10K	10%	1/4W	AB	CB1031
R28	2.7K	10%	1/4W	AB	CB2721
R29	100K	10%	1/4W	AB	CB1041
R30	2.7K	10%	1/4W	AB	CB2721
R31	100	10%	1/4W	AB	CB1011
R32	495	0.5%	1/8W	KH	M3-T1-495
R33	100	10%	1/4W	AB	CB1011
R34	220	10%	1/4W	AB	CB2211
R35	560	10%	1/4W	AB	CB5611
R36	560	10%	1/4W	AB	CB5611
R37	220	10%	1/4W	AB	CB2211
R38	220	10%	1/4W	AB	CB2211
R39	1.07K	1%	1/8W	KH	M3-T1-1.07K
R40	180	5%	1/4W	AB	CB1805
R50	5K POT			BKM	72PM
R51	14.7K	1%	1/8W	KH	M3-T1-14.7K
R52	1M POT			BKM	72PM
R53	1.5M	1%	1/4W	KH	M4-T1-1.5M
R54	500 POT			BKM	72PM
R55	330K	10%	1/4W	AB	CB3341
R56	2.05K	1%	1/8W	KH	M3-T1-2.05K
R57	5K POT			BKM	72PM
R58	14.7K	1%	1/8W	KH	M3-T1-14.7K
R59	100	10%	1/4W	AB	CB1011
R60	100	10%	1/4W	AB	CB1011
R61	4.7K	10%	1/4W	AB	CB4721
R62	31.6K	1%	1/8W	KH	M3-T1-31.6K
R63	31.6K	1%	1/8W	KH	M3-T1-31.6K
R64	31.6K	1%	1/8W	KH	M3-T1-31.6K
R65	100K POT			CTS	A-3100
R66	3.3M	10%	1/4W	AB	CB3351
R67	220	10%	1/4W	AB	CB2211
R68	100K	10%	1/4W	AB	CB1041
R69	1K	10%	1/4W	AB	CB1021
R70	4.7K	10%	1/4W	AB	CB4721
R71	TRIM			AB	TYPE CB
R72	TRIM			AB	TYPE CB
R73	22.1K	1%	1/8W	KH	M3-T1-22.1K
R74	47	10%	1/4W	AB	CB4701
R75	18K	10%	1/4W	AB	CB1831
R76	1.5K	10%	1/4W	AB	CB1521
R77	47	10%	1/4W	AB	CB4701
R78	1.5K	10%	1/4W	AB	CB1521
R79	18K	10%	1/4W	AB	CB1831
R80	100K	10%	1/4W	AB	CB1041
R81	100	10%	1/4W	AB	CB1011
R82	100	10%	1/4W	AB	CB1011
R83	560	10%	1/4W	AB	CB5611
R84	100	10%	1/4W	AB	CB1011
R85	100	10%	1/4W	AB	CB1011
R86	560	10%	1/4W	AB	CB5611
R87	100	10%	1/4W	AB	CB1011
R88	100	10%	1/4W	AB	CB1011
R89	100	10%	1/4W	AB	CB1011
R90	2.7	10%	1/4W	AB	CB27G1
R95	220	10%	1/4W	AB	CB2211
R96	4.7K	10%	1/4W	AB	CB4721
R101	100K	10%	1/4W	AB	CB1041
R104	330	10%	1/2W	AB	EB2705
R105	4.7K	10%	1/4W	AB	CB4721
R106	100	10%	1/4W	AB	CB1011
R107	1.5K	10%	1/4W	AB	CB4721
R108	47K	10%	1/4W	AB	CB4731
R109	47K	10%	1/4W	AB	CB4731
R110	47K	10%	1/4W	AB	CB4731
R111A	10.066K	0.1%	1/8W	KH	M3-T1-10.66K
R111B	TRIM			AB	TYPE CB
R112A	10.066K	0.1%	1/8W	KH	M3-T1-10.66K
R112B	TRIM			AB	TYPE CB
R113	4.7K	10%	1/4W	AB	CB4721
R114	4.7K	10%	1/4W	AB	CB4721
R115	100	10%	1/4W	AB	CB1011
R116	330	10%	1/2W	AB	EB2715
R117	12K	10%	1/4W	AB	CB1231
R118	25K POT			BKM	72PM
R119	10K	10%	1/4W	AB	CB1031
R120	10K TRIM	10%	1/4W	AB	CB1031
R121	18K	10%	1/4W	AB	CB1831
R122	47K	10%	1/4W	AB	CB4731
R123	47K	10%	1/4W	AB	CB4731
R124	4.7K	10%	1/4W	AB	CB4721
R125	10K	10%	1/4W	AB	CB1031
R129	10	10%	1/4W	AB	CB1001
R130	100K POT			BKM	72PM
R131	470K	10%	1/4W	AB	CB4741
R132	7.19K	0.1%	1/8W	KH	M3-T1-7.19K
R133	330K	10%	1/4W	AB	CB3341
R134	10K	1%	1/8W	KH	M3-T1-10K
R135	14.7K	1%	1/8W	KH	M3-T1-14.7K
R136	2.05K	1%	1/8W	KH	M3-T1-2.05K
R137	909	1%	1/8W	KH	M3-T1-909
R138	274	1%	1/8W	KH	M3-T1-274
R139	1.1K	1%	1/8W	KH	M3-T1-1.1K
R140	4.99K	1%	1/8W	KH	M3-T1-4.99K
R141	6.8K	10%	1/4W	AB	CB6821
R142	100	10%	1/4W	AB	CB1011
R143	100	10%	1/4W	AB	CB1011
R144	100	10%	1/4W	AB	CB1011
R145	1.1K	1%	1/8W	KH	M3-T1-1.1K
R146	495	0.5%	1/8W	KH	M3-T1-495
R148	10	10%	1/4W	AB	CB1001
R149	3.92K	1%	1/8W	KH	M3-T1-3.92K
R150	2.21K	1%	1/8W	KH	M3-T1-2.21K
R151	2.21K	1%	1/8W	KH	M3-T1-2.21K
R152	3.92K	1%	1/8W	KH	M3-T1-3.92K
R153	10	10%	1/4W	AB	CB1001
R154A	47	10%	1/4W	AB	CB4701
R154B	TRIM			AB	TYPE CB
R155A	47	10%	1/4W	AB	CB4701
R155B	TRIM			AB	TYPE CB
R156	22.1K	1%	1/8W	KH	M3-T1-22.1K
R157	22.1K	1%	1/8W	KH	M3-T1-22.1K
R160	4.7K TRIM	10%	1/4W	AB	CB4721
R161	25K POT			BKM	72PM
R162	5K POT			BKM	72PM
R163	560 TRIM	10%	1/4W	AB	CB5611
R164	2 POT			CTS	115R2ROB
R165	2.7	10%	1/4W	AB	CB27G1
R166	2K POT			AB	A3098
R170	1.07K	1%	1/8W	KH	M3-T1-1.07K
R171	1K POT			CTS	A3101
R172	100K POT			CTS	A3102
R173	100K POT			CTS	A3100
R174	1M TRIM	10%	1/4W	AB	CB1051
R175	10K	1%	1/8W	KH	M3-T1-10K
R176	47K	10%	1/4W	AB	CB4731
R177	22.1K	1%	1/8W	KH	M3-T1-22.1K
R178	330	10%	1/4W	AB	CB3311
R179	1.5K	10%	1/4W	AB	CB1521
R180	3.3K	10%	1/4W	AB	CB3321
R181	1.5K	10%	1/4W	AB	CB1521
R182	4.7K	10%	1/4W	AB	CB4721
R183	4.7K	10%	1/4W	AB	CB4721
R184	330	10%	1/4W	AB	CB3311
R185	10	10%	1/4W	AB	CB1001
R186	220	10%	1/4W	AB	CB2211
R187	220	10%	1/4W	AB	CB2211
R188	100K	10%	1/4W	AB	CB1041
R189	2.7	10%	1/4W	AB	CB27G1
R190	18K	10%	1/4W	AB	CB1831
R191	560	10%	1/4W	AB	CB5611
R192	560	10%	1/4W	AB	CB5611
R193	100	10%	1/4W	AB	CB1011
R194	100	10%	1/4W	AB	CB1011
R195	2.7	10%	1/4W	AB	CB27G1
R196	22	10%	1/4W	AB	CB2201
R197	4.7	10%	1/4W	AB	CB47G1
R198	4.7	10%	1/4W	AB	CB47G1
R199	22	10%	1/4W	AB	CB2201
R200	2.7	10%	1/4W	AB	CB27G1
R201	4.99K	1%	1/8W	KH	M3-T1-4.99K
R202	49.9	0.25%	1/2W	KH	M5-T1-49.9
R203	30K	0.1%	1/8W	KH	M3-T1-30K
R204	301	0.5%	1/4W	KH	M4-T1-301
R205	30K	0.1%	1/8W	KH	M3-T1-30K
R206	301	0.5%	1/4W	KH	M4-T1-301
R220	100K POT			CTS	A-3100
R221	10.066K	0.1%	1/8W	KH	M3-T1-10.066K
R222	1M TRIM	10%	1/4W	AB	CB1051
R224	10.066K	0.1%	1/8W	KH	M3-T1-10.066K
R225	1.5K	10%	1/4W	AB	CB1521
R226	3.3K	10%	1/4W	AB	CB3321
R227	1.5K	10%	1/4W	AB	CB1521
R228	4.7K	10%	1/4W	AB	CB4721

RESISTOR

Symbol	Description			Mfr.	Part No.
R229	4.7K	10%	1/4W	AB	CB4721
R230	330	10%	1/4W	AB	CB3311
R231	100K	10%	1/4W	AB	CB1041
R232	2.7	10%	1/4W	AB	CB27G1
R233	220	10%	1/4W	AB	CB2211
R234	220	10%	1/4W	AB	CB2211
R235	2.7	10%	1/4W	AB	CB27G1
R236	18K	10%	1/4W	AB	CB1831
R237	560	10%	1/4W	AB	CB5611
R238	560	10%	1/4W	AB	CB5611
R239	100	10%	1/4W	AB	CB1011
R240	100	10%	1/4W	AB	CB1011
R241	2.7	10%	1/4W	AB	CB27G1
R242	22	10%	1/4W	AB	CB2201
R243	4.7	10%	1/4W	AB	CB47G1
R244	4.7	10%	1/4W	AB	CB47G1
R245	22	10%	1/4W	AB	CB2201
R246	2.7	10%	1/4W	AB	CB27G1

CAPACITORS

Symbol	Description			Mfr.	Part No.
C1	6.8mf	20%	35V	SP	196D685X0035FB
C2	6.8mf	20%	35V	SP	196D685X0035FB
C3	1000pf	20%	500V	SP	C023B501E102M
C4	1000pf	20%	500V	SP	C023B501E102M
C5	1000pf	20%	500V	SP	C023B501E102M
C6	1000pf	20%	500V	SP	C023B501E102M
C7	1000pf	20%	500V	SP	C023B501E102M
C8	1000pf	20%	500V	SP	C023B501E102M
C9	1000pf	20%	500V	SP	C023B501E102M
C10	4.5-20pf TRIMMER			STT	TR1K0-02-N750
C11	4.7pf	10%	500V	ASP	9210-47910
C12	100pf	10%	500V	ELM	DM15C101K
C20	47pf	10%	500V	ELM	DM15C470K
C21	0.1mf	±1%	200V	TRW	X663F-5
C22	1000pf	1%	500V	ELM	CM19C102F
C23	68pf	1%	500V	ELM	CM15C680F
C24	10pf	10%	500V	ASP	9213-10110
C25	100pf	10%	500V	ELM	DM15C101K
C26	0.01mf	20%	500V	SP	C023B501G103M
C27	100pf	10%	500V	ELM	DM15C101K
C28	0.01mf	20%	500V	SP	C023B501G103M
C29	15pf	10%	500V	ASP	9300-15110
C30	0.01mf	20%	500V	SP	C023B501G103M
C31	15pf	10%	500V	ASP	9300-15110
C32	0.01mf	20%	500V	SP	C023B501G103M
C33	0.01mf	20%	500V	SP	C023B501G103M
C34	0.01mf	20%	500V	SP	C023B501G103M
C35	0.01mf	20%	500V	SP	C023B501G103M
C36	0.01mf	20%	500V	SP	C023B501G103M
C37	0.01mf	20%	500V	SP	C023B501G103M
C38	6.8mf	20%	35V	SP	196D685X0035FB
C39	0.01mf	20%	500V	SP	C023B501G103M
C40	500mf	-10%+100%	25V	MAL	TT501N025G1A1P
C41	1mf	20%	35V	MAL	TDC105M035EL
C42	1mf	20%	35V	MAL	TDC105M035EL
C43	500mf	-10%+100%	25V	MAL	TT501N025G1A1P
C44	0.01mf	20%	500V	SP	C023B501G103M
C45	1mf	20%	35V	MAL	TDC105M035EL
C46	1mf	20%	35V	MAL	TDC105M035EL
C50	3-9pf TRIMMER			STT	TR1K0-02-N075
C51	9.1pf	5%	500V	ASP	9213-91905
C53	0.01mf	20%	500V	SP	C023B501G103M
C54	0.01mf	20%	500V	SP	C023B501G103M
C55	100pf	10%	500V	ELM	DM15C101K
C56	0.01mf	20%	500V	SP	C023B501G103M
C57	0.01mf	20%	500V	SP	C023B501G103M
C58	0.01mf	20%	500V	SP	C023B501G103M
C60	2.5-6pf TRIMMER			STT	TRIK0-02-N033
C61	0.01mf	20%	500V	SP	C023B501G103M
C62	10pf	10%	500V	ASP	9213-10110
C63	2pf	10%	500V	ASP	9208-20910
C64	0.01mf	20%	500V	SP	C023B501G103M
C65	100pf	10%	500V	ELM	DM15C101K
C66	0.01mf	20%	500V	SP	C023B501G103M
C67	0.01mf	20%	500V	SP	C023B501G103M
C68	0.01mf	20%	500V	SP	C023B501G103M
C69	3.3pf	10%	500V	ASP	9209-33910
C70	0.01mf	20%	500V	SP	C023B501G103M
C71	3.3 pf	10%	500V	ASP	9209-33910
C72	0.01mf	20%	500V	SP	C023B501G103M
C73	0.01mf	20%	500V	SP	C023B501G103M
C74	1mf	20%	35V	MAL	TDC105M035EL
C75	1mf	20%	35V	MAL	TDC105M035EL
C76	1mf	20%	35V	MAL	TDC105M035EL
C77	1mf	20%	35V	MAL	TDC105M035EL
C78	0.01mf	20%	500V	SP	C023B501G103M
C80	2.5-6 pf TRIMMER			STT	TRIK0-02-N033
C81	0.01mf	20%	500V	SP	C023B501G103M
C82	4.7pf	10%	500V	ASP	9210-47910
C83	0.01mf	20%	500V	SP	C023B501G103M
C84	100pf	10%	500V	ELM	DM15C101K
C85	0.01mf	20%	500V	SP	C023B501G103M
C86	0.01mf	20%	500V	SP	C023B501G103M
C87	0.01mf	20%	500V	SP	C023B501G103M
C88	0.01mf	20%	500V	SP	C023B501G103M
C89	6.8pf	10%	500V	ASP	9212-68910
C90	6.8pf	10%	500V	ASP	9212-68910
C91	0.01mf	20%	500V	SP	C023B501G103M
C92	0.01mf	20%	500V	SP	C023B501G103M
C93	0.01mf	20%	500V	SP	C023B501G103M
C94	1mf	20%	500V	MAL	TDC105M035EL
C95	1mf	20%	500V	MAL	TDC105M035EL

TRANSISTORS, DIODES & MISC.

Symbol	Description	Mfr.	Part No.
Q1	MPS6515	MOT	MPS6515
Q2	MPS6518	MOT	MPS6518
Q3	TIS97	TI	TIS97
Q4	TIS97	TI	TIS97
Q5	MPS6518	MOT	MPS6518
Q6	MPS6515	MOT	MPS6515
Q7	MPS6515	MOT	MPS6515
Q8	MPS6518	MOT	MPS6518
Q9	SU2366	TEL	SU2366
Q10	MPS6518	MOT	MPS6518
Q11	MPS6518	MOT	MPS6518
Q12	MPS6515	MOT	MPS6515
Q13	MPS6518	MOT	MPS6518
Q14	MPS6515	MOT	MPS6515
Q15	MPS6515	MOT	MPS6515
Q16	MPS6518	MOT	MPS6518
Q17	2N2905A	MOT	2N2905A
Q18	MPS6515	MOT	MPS6515
Q19	MPS6515	MOT	MPS6515
Q20	MPS6515	MOT	MPS6515
Q21	MPS6515	MOT	MPS6515
Q22	2N2219A	MOT	2N2219A
Q23	MPS6518	MOT	MPS6518
Q24	MPS6518	MOT	MPS6518
Q25	MPS6518	MOT	MPS6518
Q26	MPS6518	MOT	MPS6518
Q27	MPS3640	MOT	MPS3640
Q28	MPS3640	MOT	MPS3640
Q29	MPS3640	MOT	MPS3640
Q30	MPS6515	MOT	MPS6515
Q31	MPS6515	MOT	MPS6515
Q32	MPS6518	MOT	MPS6518
Q33	MPS6515	MOT	MPS6515
Q34	MPS6515	MOT	MPS6515
Q35	MPS6518	MOT	MPS6518
Q36	TIS97	TI	TIS97
Q37	TIS97	TI	TIS97
Q38	MPS6515	MOT	MPS6515
Q39	MPS6518	MOT	MPS6518
Q40	MPS6518	MOT	MPS6518
Q41	MPS6515	MOT	MPS6515
Q42	2N2219A	MOT	2N2219A
Q43	2N2905A	MOT	2N2905A
Q44	TIS97	TI	TIS97
Q45	TIS97	TI	TIS97
Q46	MPS6515	MOT	MPS6515
Q47	MPS6518	MOT	MPS6518
Q48	MPS6518	MOT	MPS6518
Q49	MPS6515	MOT	MPS6515
Q50	2N2219A	MOT	2N2219A
Q51	2N2905A	MOT	2N2905A
CR1	1N4149	TR	1N4149
CR2	1N4149	TR	1N4149
CR3	1N4149	TR	1N4149
CR4	1N4149	TR	1N4149
CR5	1N4149	TR	1N4149
CR6	1N4149	TR	1N4149
CR7	1N4149	TR	1N4149
CR8	1N4149	TR	1N4149
CR9	1N4149	TR	1N4149
CR10	1N4149	TR	1N4149

Symbol	Description	Mfr.	Part No.
CR11	1N4149	TR	1N4149
CR12	1N4149	TR	1N4149
CR13	1N4149	TR	1N4149
CR14	1N4149	TR	1N4149
CR15	1N4149	TR	1N4149
CR16	1N4149	TR	1N4149
CR17	1N4149	TR	1N4149
CR18	1N4149	TR	1N4149
CR19	1N4002	MSC	1N4002
CR20	1N4002	MSC	1N4002
CR21	1N4002	MSC	1N4002
CR22	1N4002	MSC	1N4002
CR25	1N4149	TR	1N4149
CR26	1N4149	TR	1N4149
CR27	1N4149	TR	1N4149
CR28	1N4149	TR	1N4149
CR29	MBD501	MOT	MBD501
CR30	MBD501	MOT	MBD501
CR31	1N4149	TR	1N4149
CR32	1N4149	TR	1N4149
CR33	1N4149	TR	1N4149
CR34	1N4149	TR	1N4149
L1	15uhy 10% 0.4W	DLV	1537-40
L2	15uhy 10% 0.4W	DLV	1537-40
L3	15uhy 10% 0.4W	DLV	1537-40
F1	1/8 A/117V SLO-BLO	BUS	MDL
	1/16 A/234V SLO-BLO	BUS	MDL
S1	ROTARY SWITCH-MULT.	KH	B3072
S2	SLIDE SWITCH-LINE	SWC	46256LFR
S3	PUSHBUTTON SWITCH-POWER	KH	35000-17
S4	PUSHBUTTON SWITCH-WAVEFORM	KH	A3103
S5	SLIDE SWITCH-OFFSET	CW	GF124
S7	SLIDE SWITCH-ATT.	CW	G128S
T1	POWER TRANSFORMER	KH	B3092A
	RED BINDING POST	SUP	DF21RC
	BLACK BINDING POST	SUP	DF21BC
	BNC CONNECTOR	KH	B2440
I1	PILOT LIGHT	ED	EG03-CCB-N110
	DIAL ASSEMBLY	KH	B2709-10

MANUFACTURERS CODE

AB	(01121)	Allen Bradley Co.	Milwaukee, Wis.
ASP	(82142)	Airco Speer	Dubois, Pa.
BKM	(30646)	Beckman Instr., Inc.	Cedar Grove, N.J.
BUS	(71400)	Bussman Mfg. Co.	St. Louis, Mo.
CTS	(71450)	CTS Corp.	Elkhart, Ind.
CW	(79727)	Continental Wirt. Elec.	Philadelphia, Pa.
DLV	(99800)	Delevan Electronics	East Aurora, N.Y.
ELM	(72136)	Electromotive Mfg.	Willimantic, Ct.
ELD	(03797)	Eldema Corp.	Compton, Ca.
KH	(88865)	Krohn-Hite Corp.	Cambridge, Ma.
MAL	(37942)	P.R. Mallory & Co.	Indianapolis, Ind.
MOT	(04713)	Motorola Semiconductor	Phoenix, Az.
MSC	(14552)	Micro Semiconductor Corp.	Culver City, Ca.
SP	(56289)	Sprague Electric Co.	North Adams, Ma.
STT		Stettner-Trush	Cazanovia, N.Y.
SUP	(58474)	Superior Electric Co.	Bristol, Ct.
SWC	(82389)	Switchcraft, Inc.	Chicago, Il.
TEL		Teledyne Semiconductor	Mountain View, Ca.
TI	(01295)	Texas Instrument, Inc.	Dallas, Texas
TR	(03877)	Transitron Electric Co.	Wakefield, Ma.
TRW	(84411)	TRW Corp.	Ogallala, Ne.

KROHN-HITE
CORPORATION

PRINTED IN U.S.A.