RAYTHEON COMPUTER

AID DATA SHEET

MODEL

77006

OUTPUT CHANNEL EXPANDER

GENERAL

The Output Channel Expander, Model 77006, accepts 16 parallel input lines and routes these lines to four independent power bus sources for distribution. The 77006 is normally used where a single bus source lacks the drive capacity required for distribution, or where it is necessary to distribute outputs to multiple external devices through independent cables. The input signals are not logically inverted where they appear at the outputs of the 77006.

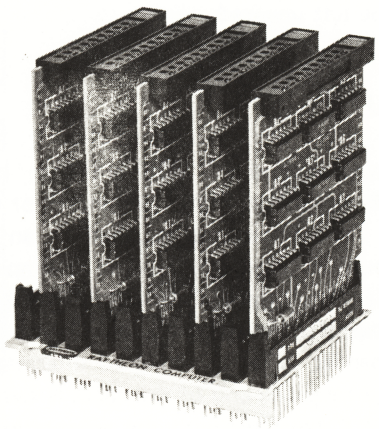

SPECIFICATIONS

DIGITAL INPUTS

Function	No. of Lines	Unit DTL Load
Data Output Bus No. 1 Strobe	1	3
Data Output Bus No. 2 Strobe	1	3
Data Output Bus No. 3 Strobe	1	3
Data Output Bus No. 4 Strobe	1	3
Common Data Input Bus	16	1
Common Data Input Bus Strobe	1	3

AVERAGE POWER REQUIREMENTS

+5V 1 Ampere (±4% regulation and accuracy)
= 10 Power Units

DIGITAL OUTPUTS

Function	No. of Lines	Unit DTL Drive
Data Output Bus No. 1	16	25
Data Output Bus No. 2	16	25
Data Output Bus No. 3	16	25
Data Output Bus No. 4	16	25

MECHANICAL

Size	Approx. 4.125 x 4.5 x 4 inches = 10 Card Positions = 1 Unit Space
M Series Cards	MTG4 (5), [Unterminated Option Uses MTG4 (1), MTG3 (4)]
Spare Connectors	None

RAYTHEON COMPUTER – 2700 SO. FAIRVIEW ST., SANTA ANA, CALIF. 92704 (714) 546 - 7160 TWX 910 595 - 1570

RAYTHEON

INPUTS

Inputs to the 77006 consist of one 16-bit bus and five gating signals. The first gating signal enables the transfer of the Input Bus Lines, via the Data Input Buffer, to the inputs of the four Data Output Buffers. The other four gating signals independently enable each of the Data Output Buffers placing data on the Output Buses. *Positive* gating levels enable the transfers. If gating is not required for the application, the gating signal lines should be left unwired.

OUTPUTS

The outputs of the 77006 are four independently gated 16-wire buses. Either terminated or unterminated Output Drivers may be supplied as an option. The 77006 outputs may be hard-wired or connected through an MCC1 Cable Card. Connecting in this manner permits external cables to be routed directly from the Output Expander without wiring to intermediate connectors. The receiving end of the cable is terminated using an MCC2 Cable Card with the appropriate terminating networks.

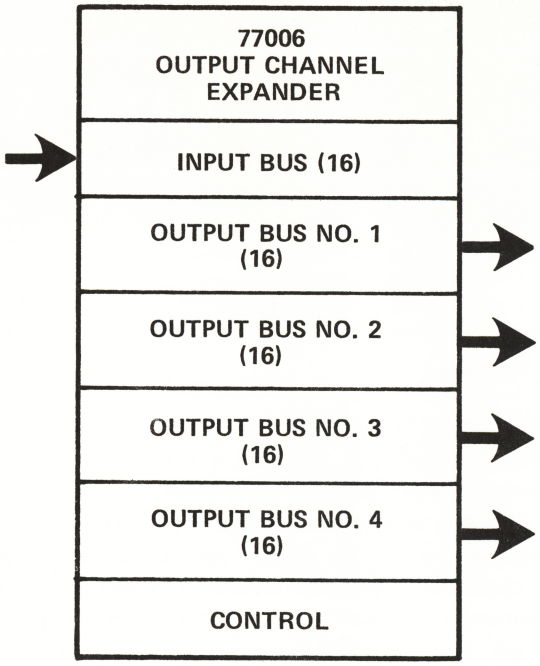

Figure 1. Functional Configuration Diagram.

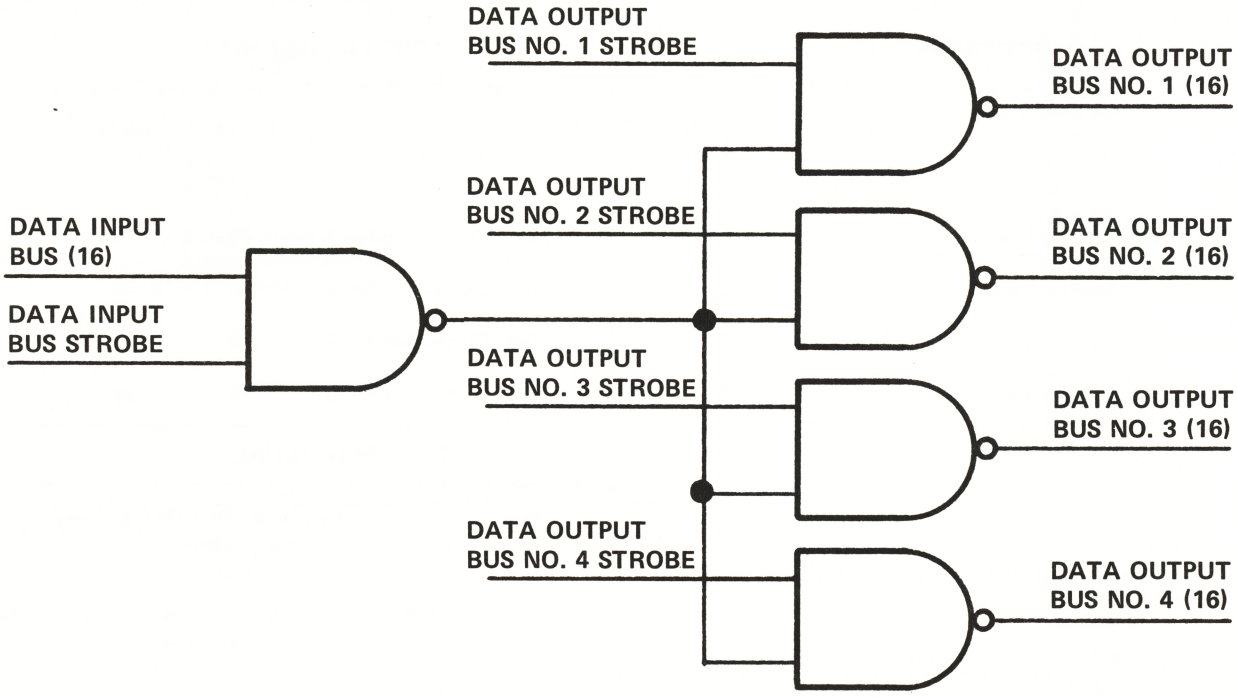

Figure 2. Inter-Block or Inter-Unit Simplified Diagram

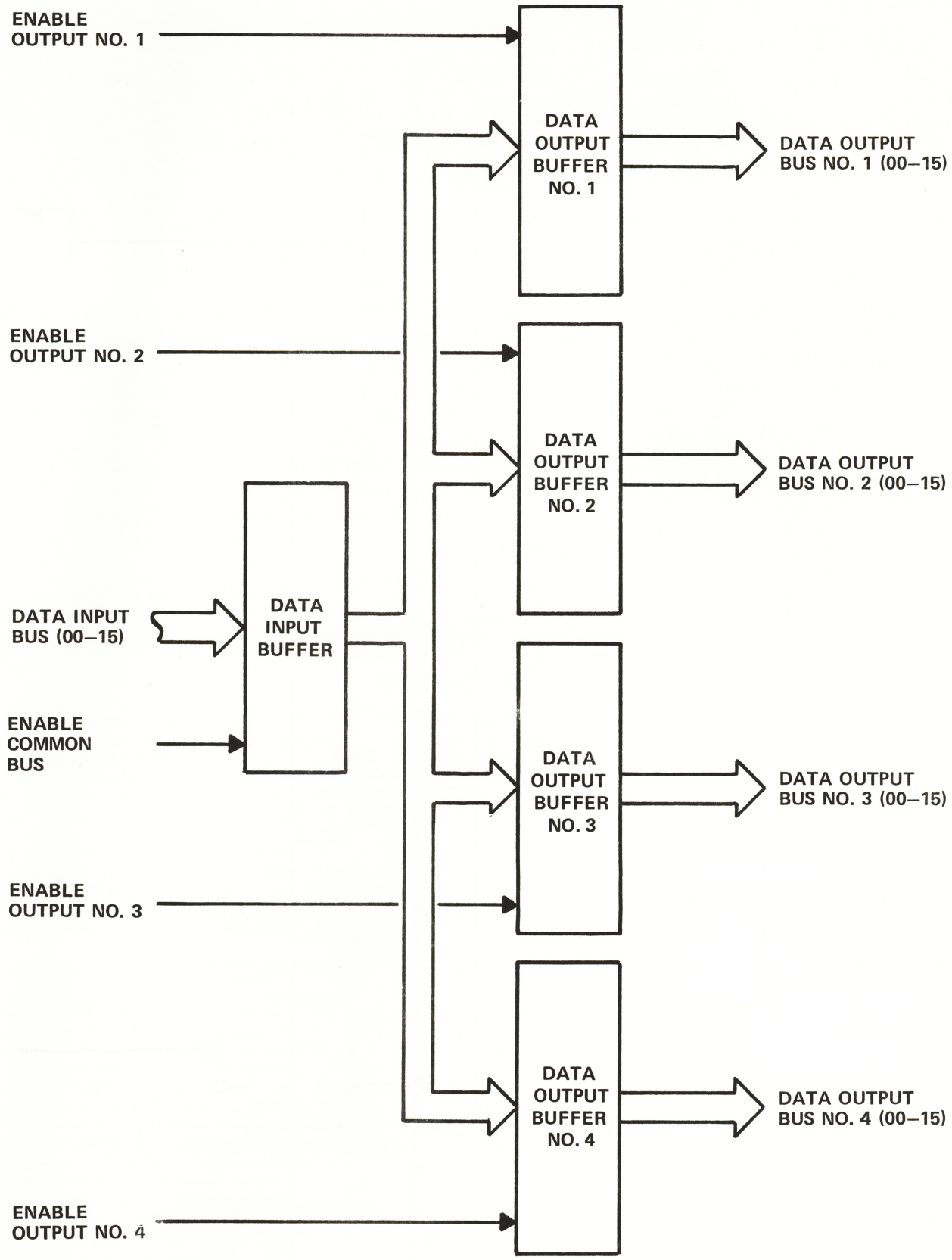

Figure 3. Block Diagram, Model 77006.

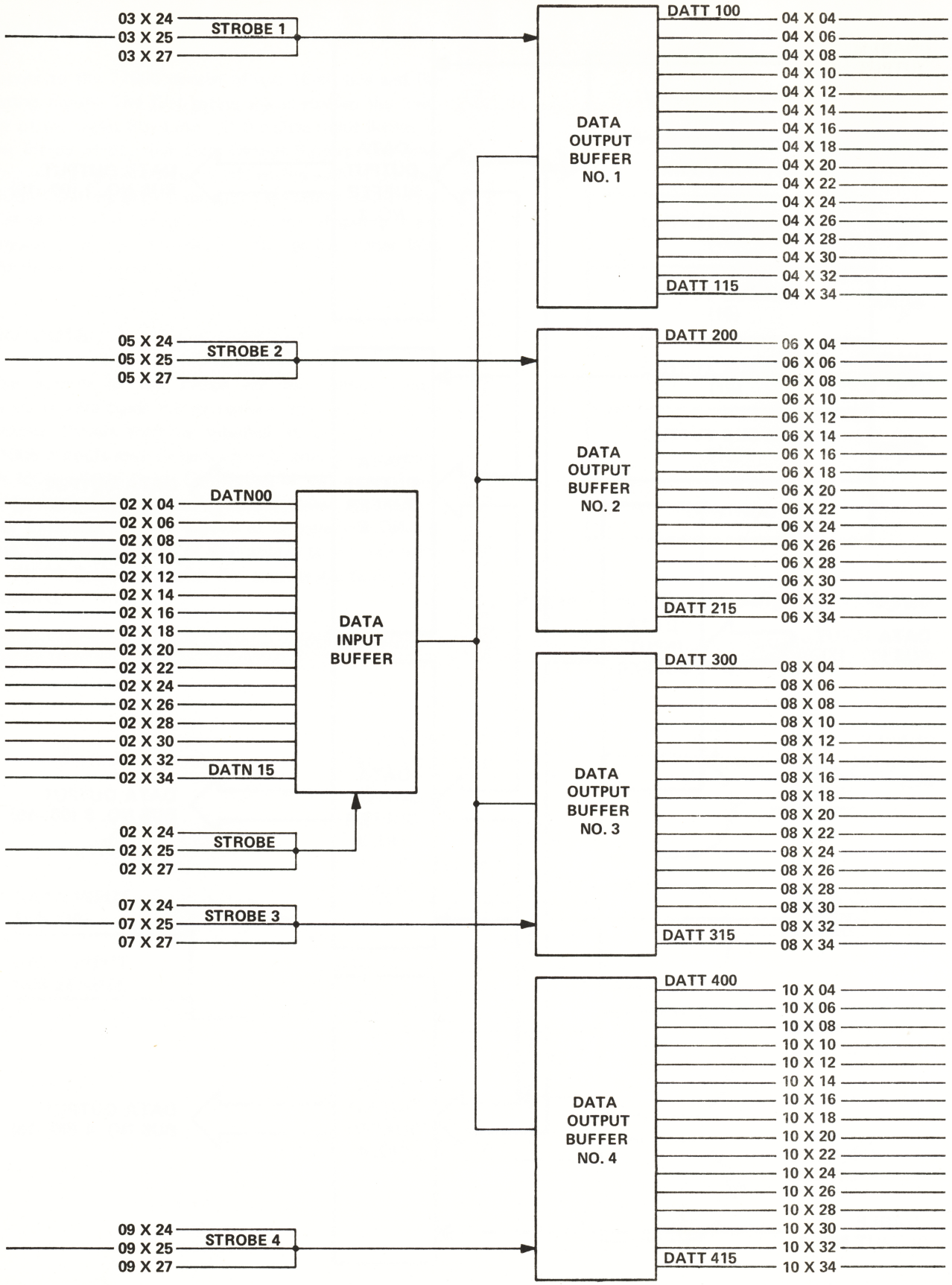

Figure 4. Wiring Diagram.