RAYTHEON COMPUTER

AID DATA SHEET

MODEL

77010

RELAY OUTPUT BUFFER

GENERAL

The Relay Output Buffer, Model 77010, accepts one bus of 16 lines and stores this data in a Buffer Storage Register. Outputs from the 77010 are contact closures of 16 reed relays. *Positive* logic levels applied to the Storage Register appear at the output as contact *closures* and *ground* levels as *open* contacts. The 77010 is normally used for circuits having relatively high power to digital requirements or to provide system isolation. Inputs to the 77010 might typically come from AID blocks 77001, 77005, 77006, or 77007.

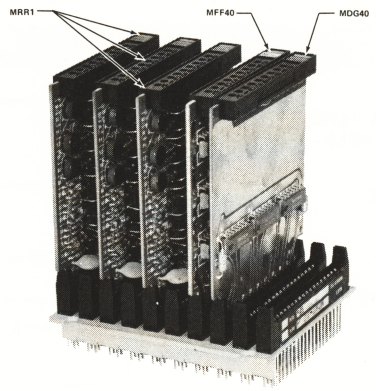

INPUTS

Inputs to the 77010 consist of a data bus of 16 lines, clock terms that enter data into a Storage Register, and reset strobes that clear the Storage Register and open all relay contacts. Figure 2 shows that data on the input bus must be stable a minimum of 30 nanoseconds before the rise of the input strobes. The input strobes must then be above 1.5V for at least 30 nanoseconds for proper storage. The reset strobes require the same pulse widths as the input strobes to insure complete clearing of all 16 memory elements. Both clearing and storing of information occurs at the leading edge of the strobes. If the clear function is not required, one of the clear strobes must be grounded.

OUTPUTS

Figure 2 shows the timing relationships of the signals associated with the 77010. The specifications shown on the first page define the detail characteristics of the *Form A* relay.

SPECIFICATIONS

DIGITAL INPUTS

Function	No. of Lines	Unit DTL Load
Data Input Bus	16	1
Data Input Bus Strobes	4	1
Reset Strobes	4	1

MECHANICAL

Size	Approx. 4.125 x 4.5 x 3.75 = 10 Card Positions = 1 Unit Space
M Series Cards	MFF40 (1), MRR1 (3), MDG40 (1)
Spare Connectors	None

AVERAGE POWER REQUIREMENTS

+5V, 486 Milliamperes (±4% reg. and acc.) = 5 Power Units
- 5V, 3 Milliamperes = 1 Power Unit

DIGITAL OUTPUTS

Function	No. of Lines
Data Output Bus	16 Contact Closures

RELAY CHARACTERISTICS

Frequency	0 to 100 Hz
Contact Rating	
Load Power	10 watts maximum
Load Current	0.5 amps, maximum
Load Voltage	250 volts maximum
Contact Resistance	200 milliohm
Pull In Delay Time	1 millisecond
Drop Out Delay Time	0.4 millisecond
Contact Bounce	0.2 millisecond

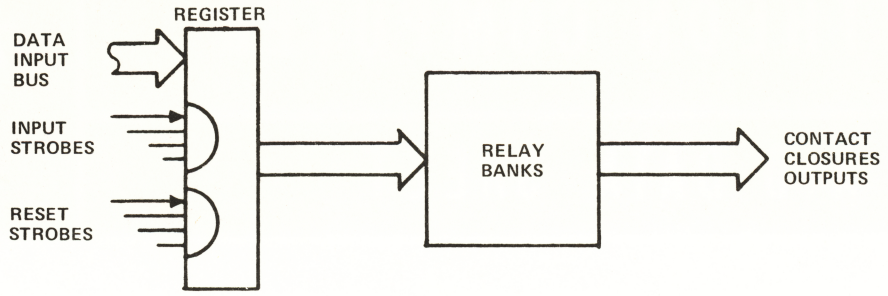

Figure 1. Block Diagram, Model 77010

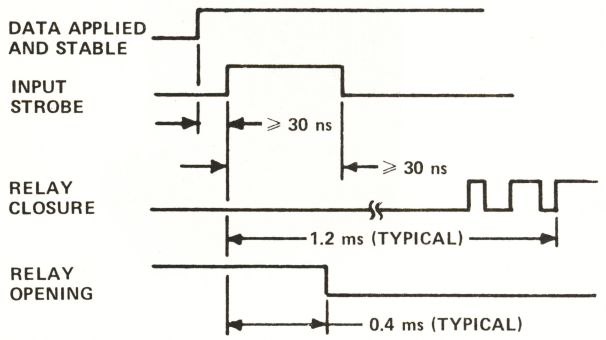

Figure 2. Relay Output Buffer Timing (No Scale)

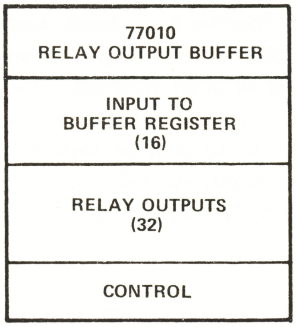

Figure 3. Functional Configuration Diagram

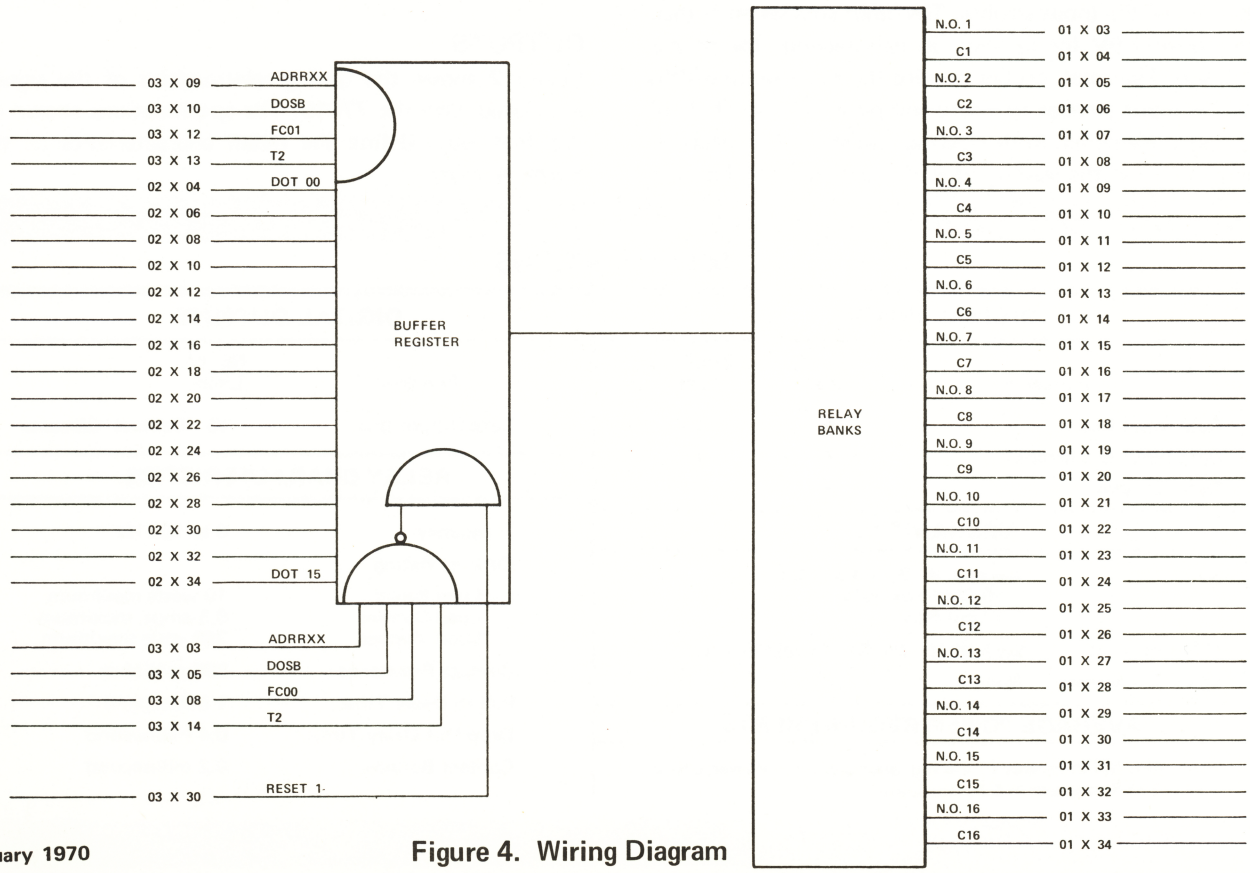

Figure 4. Wiring Diagram