RAYTHEON COMPUTER

AID DATA SHEET

MODEL

77021

COUNT / INTERVAL COMPARE INDICATOR

GENERAL DESCRIPTION

The Counter/Interval Compare Utility Module is an assembly of TTL integrated circuit elements prewired on one logic card to form four 4-bit count and compare sections and a control section. The individual counting and comparing elements may be interconnected in a variety of ways to produce several circuit configurations.

The basic counting element is a 4-bit binary ripple counter with a propagation delay of approximately 75 ns. When connected in series, the full 16-bit delay is approximately 300 ns allowing count rates of 1 MHz to be easily obtained.

The comparison element is a 4-bit two-word comparator with both the true and complement equality output. Open circuit inputs for external data will appear true and should be grounded when less than 16 bits are to be compared.

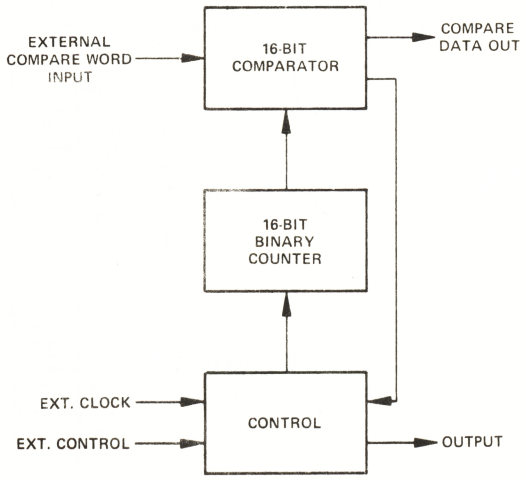

Figure 1. Block Diagram Counter/Compare Utility Module.

SPECIFICATIONS

DIGITAL INPUTS

Function	No. of Lines	Unit DTL Load
Data Input	16	2.6

DIGITAL OUTPUTS

Function	No. of Lines	Unit DTL Drive
Data Output	1	8

AVERAGE POWER REQUIREMENTS

+5V	504 Milliamperes (±4% Regulation and Accuracy)
	= 6 Power Units

MECHANICAL

Size	Approx. 4.125 x 2.0 x 4 inches
	= 4 Card Position
	= 2/5 Unit Space
M Series Cards	MUB6 (1)

Applications

The Counter/Compare Module connector may be wired to form several logic configurations. Three of the most common are:

- *Comparator — 16 bits*
- *Programmable square wave generator — 12 bits*
- *Four programmable pulse timers*

Interconnection and timing diagrams for the above configurations are shown in Figures 2 through 4.

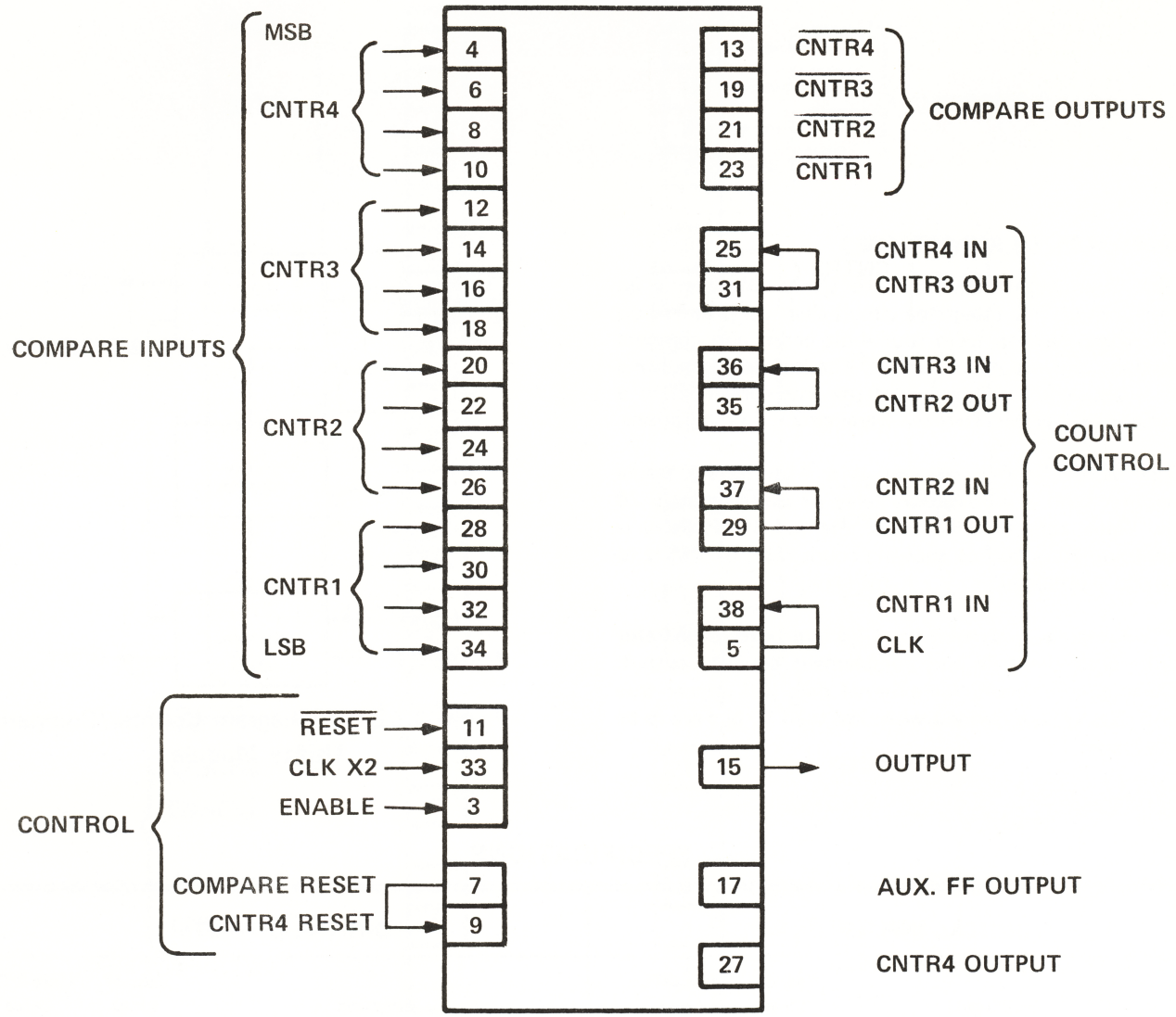

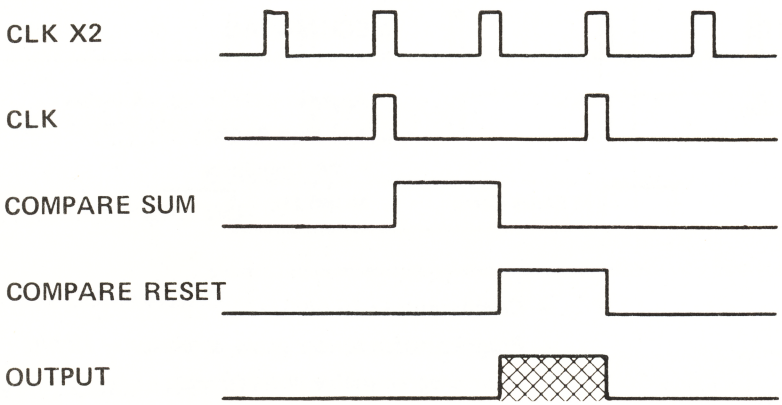

* NOTE: COMPARISON TO EXT. NUMBER IS ALWAYS N + 1.

Figure 2. 16 Bit-Comparator.

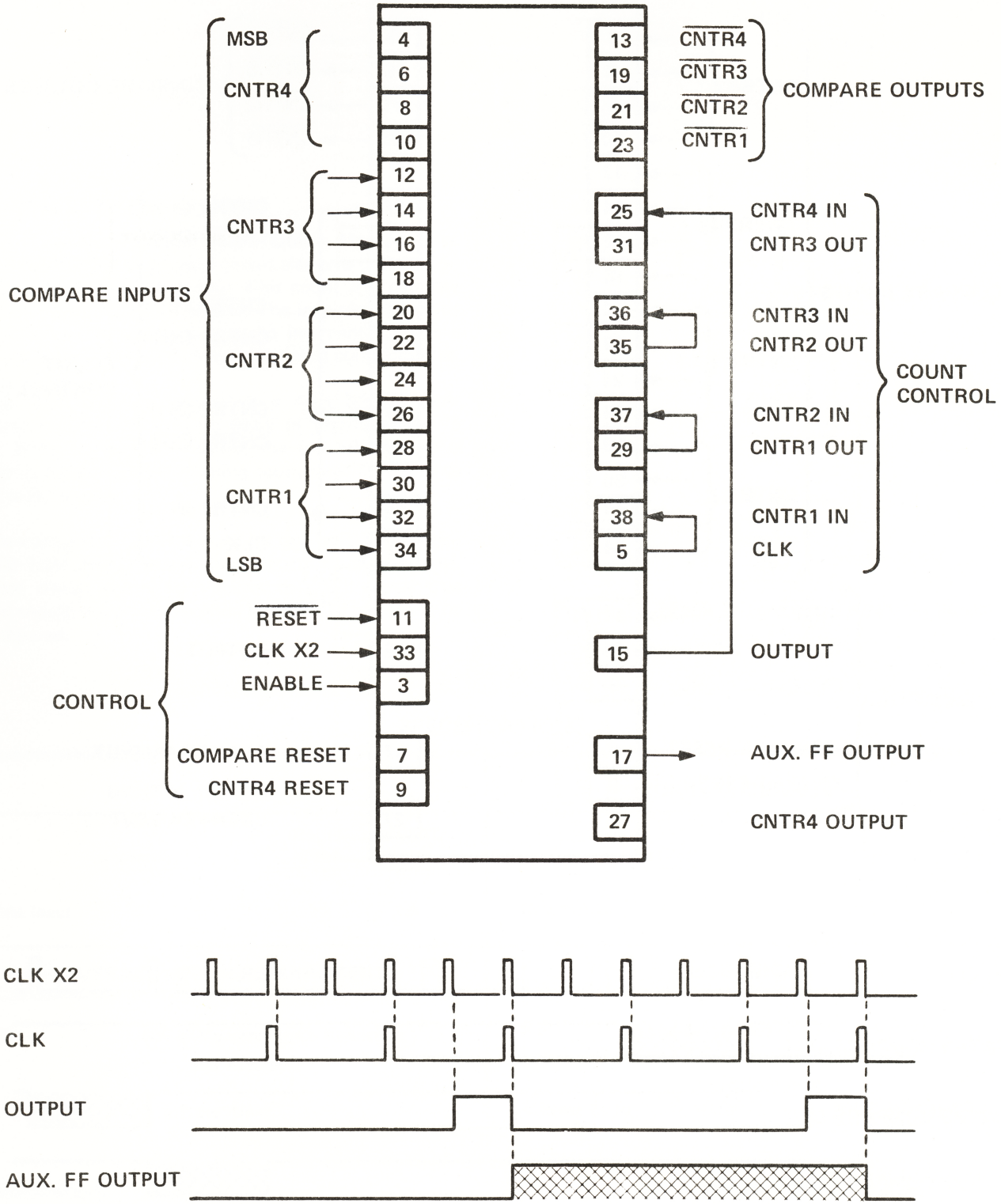

* NOTE: IC CIRCUIT ELEMENT LOC. A10 REMOVED.

Figure 3. Programmable Square Wave Generator.

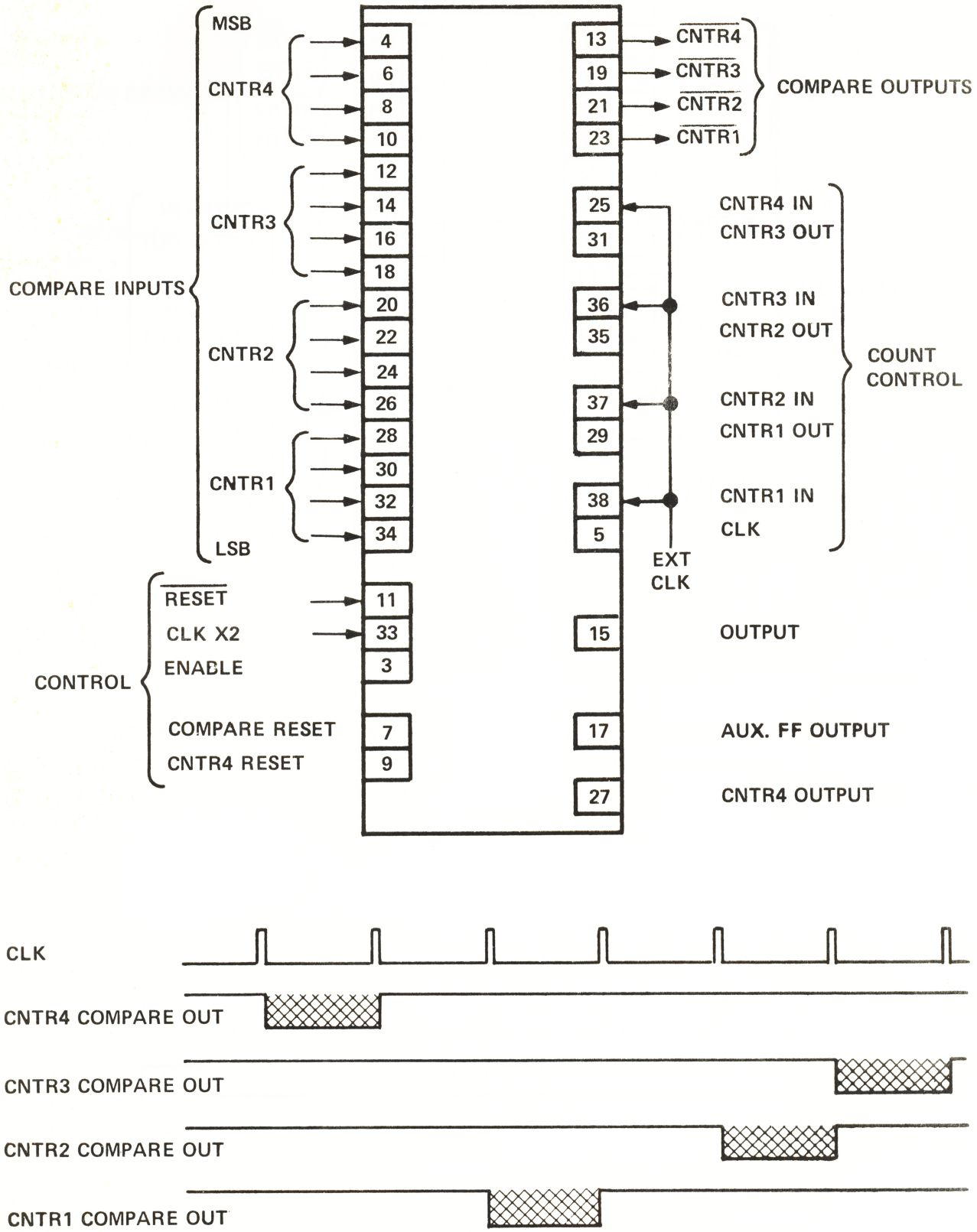

Figure 4. Four Programmable Pulse Timers.