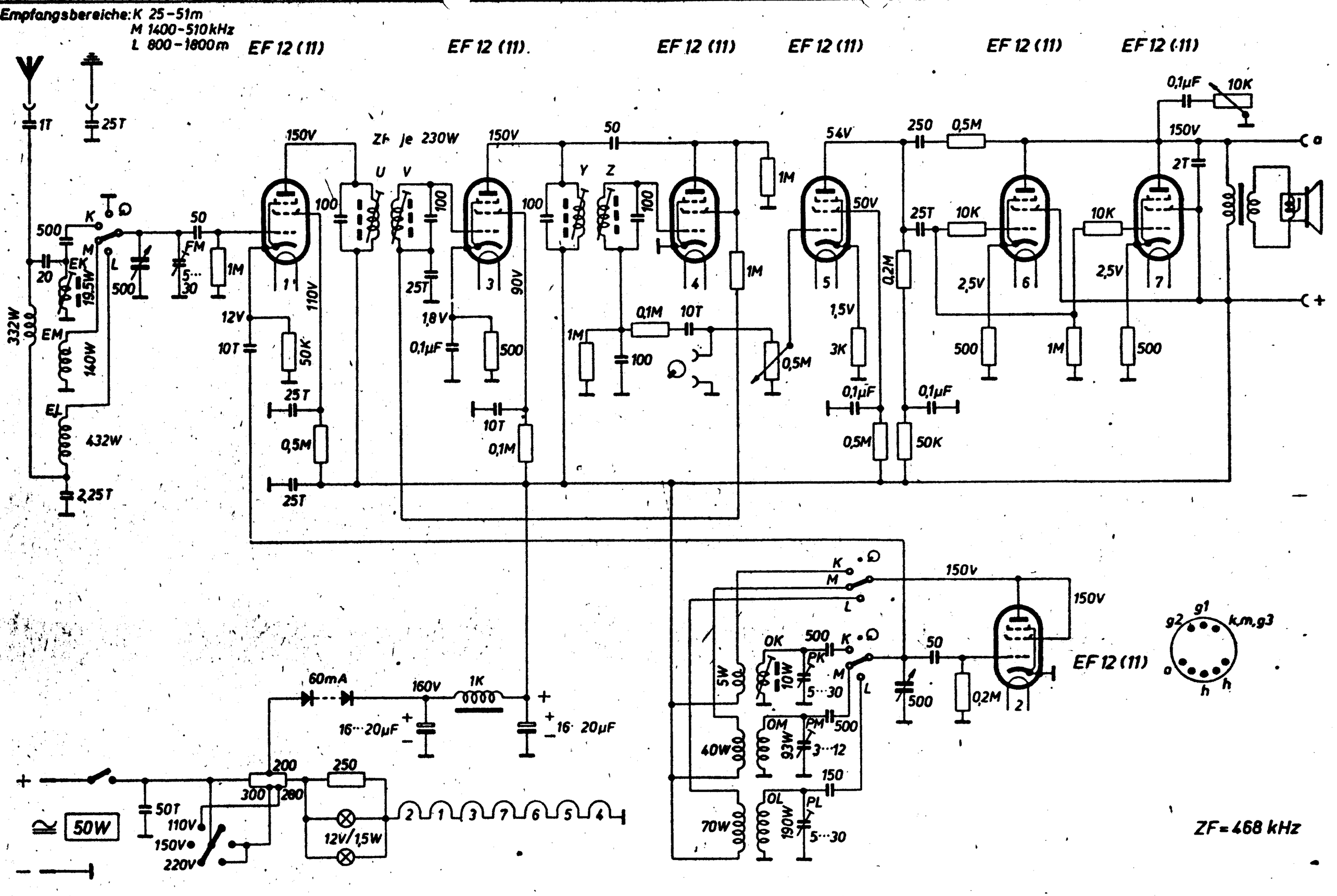
Empfangsbereiche: K 25–51m
M 1400–510 kHz
L 800–1800m
EF 12 (11)
EF 12 (11)
EF 12 (11)
EF 12 (11)
EF 12 (11)
EF 12 (11)
ZF je 230W
ZF = 468 kHz
50W
Atlas Ra 1

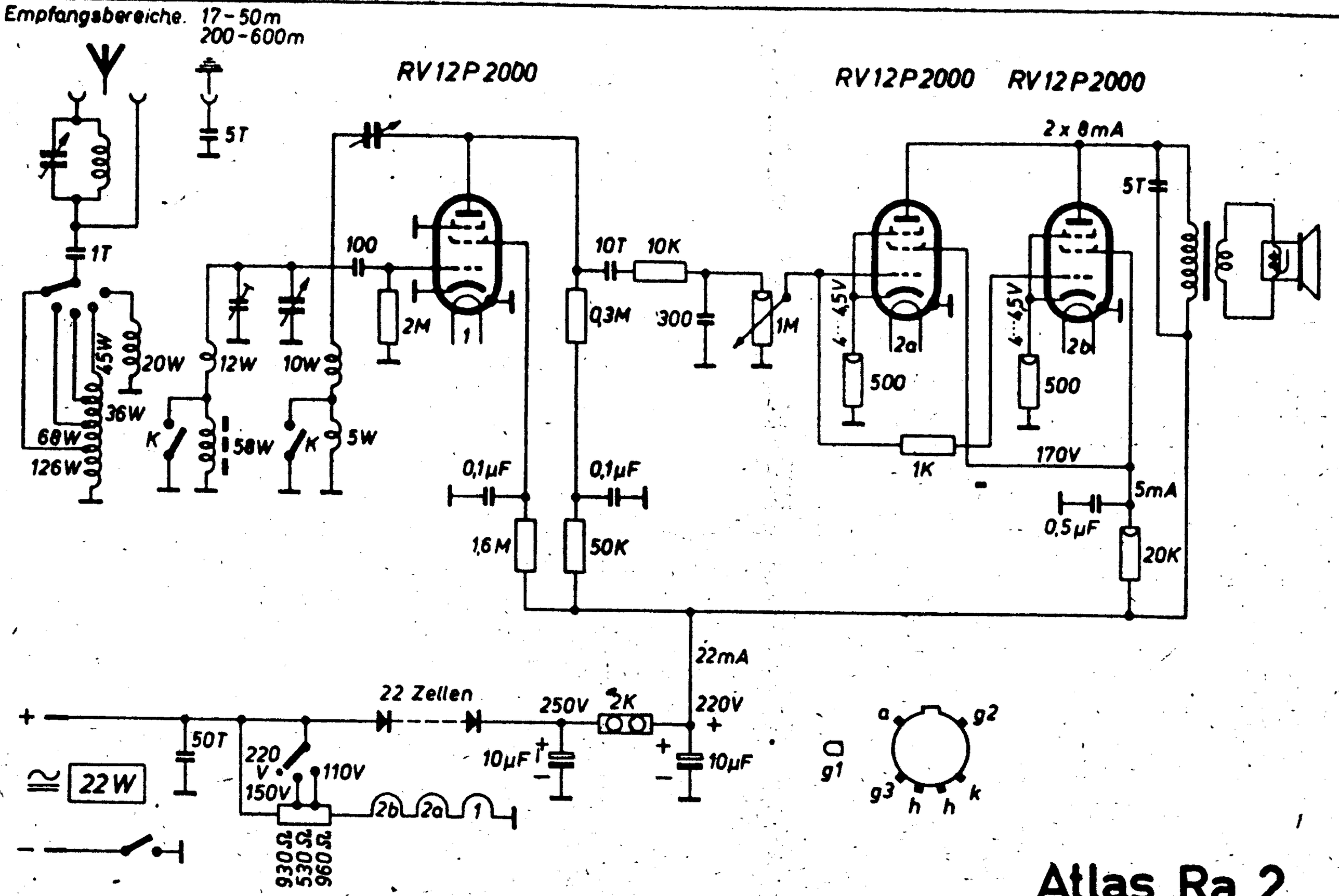
Empfangsbereiche. 17-50m
200-600m
RV12P2000
RV12P2000
RV12P2000
5T
1T
100
2M
1
10T
10K
0,3M
300
1M
2x 8mA
5T
4...4,5V
2a
500
1K
170V
5mA
0,5µF
20K
0,1µF
1,6M
50K
22mA
220V
2K
250V
10µF
45W
20W
36W
68W
126W
12W
10W
K
58W
5W
22 Zellen
50T
220 V
110V
150V
930Ω
530Ω
960Ω
2b
2a
1
≅ 22W
a
g2
g1
g3
h
h
k

Atlas Ra 2