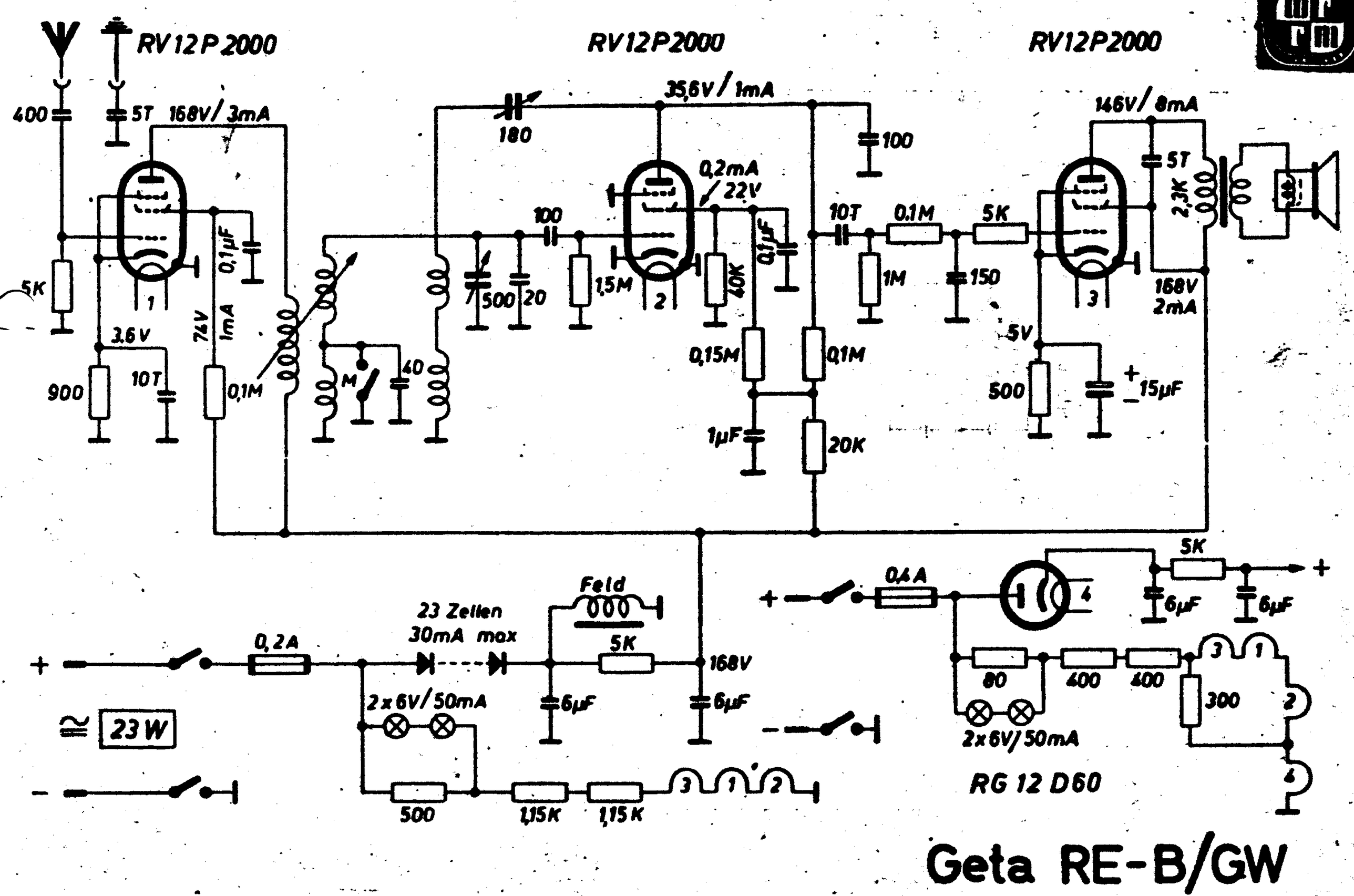
RV12P2000
RV12P2000
RV12P2000
400
5T
168V/3mA
5K
1
3,6V
900
10T
74V
1mA
0,1µF
0,1M
M
40
180
35,6V/1mA
100
500
20
100
1,5M
0,2mA
/22V
2
40K
0,1µF
0,15M
1µF
0,1M
20K
10T
0,1M
1M
5K
150
146V/8mA
5T
2,3K
3
168V
2mA
5V
500
15µF
0,2A
23 Zellen
30mA max
Feld
5K
168V
6µF
6µF
2x6V/50mA
≅ 23W
500
1,15K
1,15K
3
1
2
0,4A
4
5K
6µF
6µF
80
400
400
300
3
1
2
4
2x6V/50mA
RG 12 D60
Geta RE-B/GW