Graßmann – Samoa

4 Röhren
7 Kreise
S – W

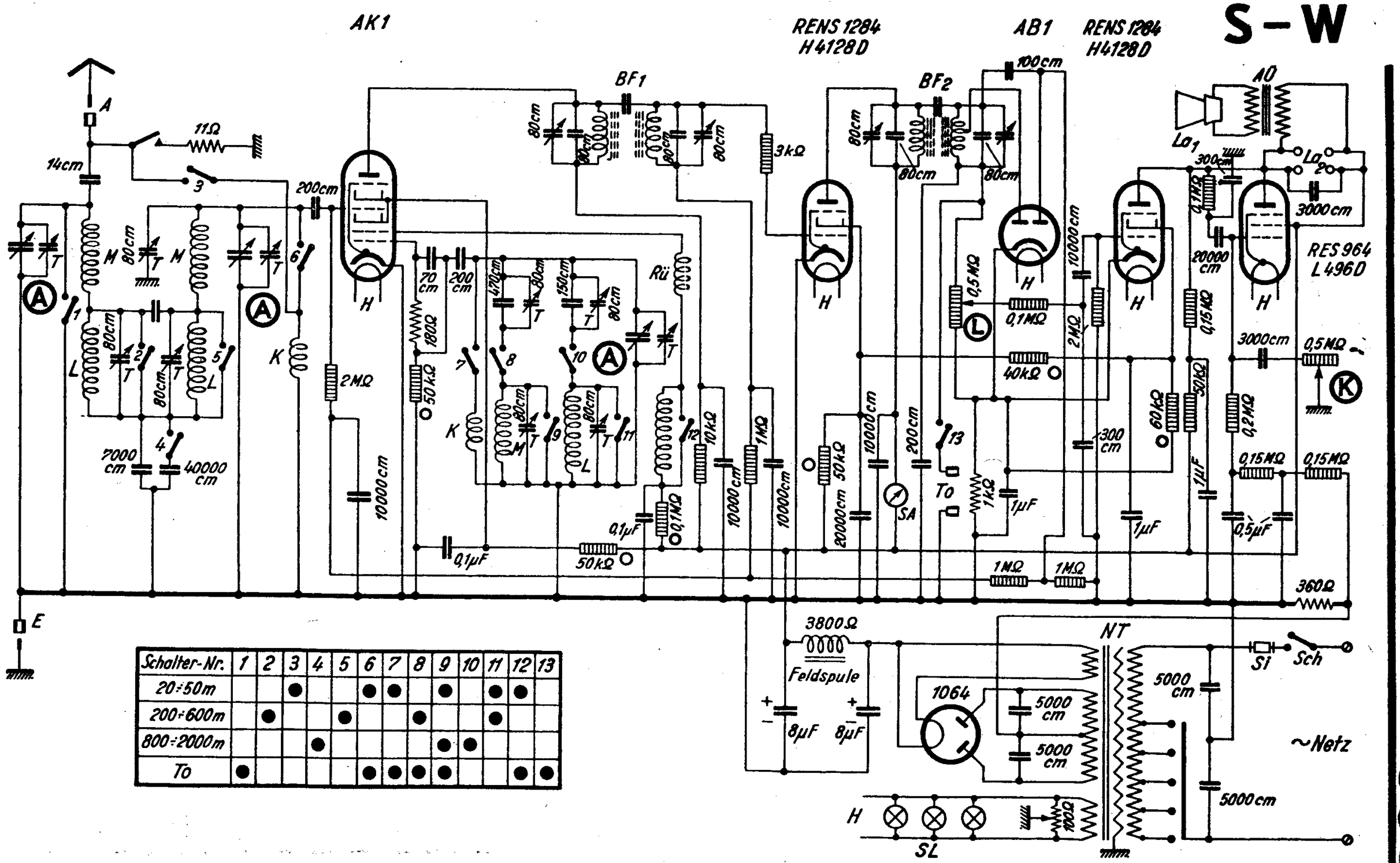

Schalter-Nr.	1	2	3	4	5	6	7	8	9	10	11	12	13
20÷50m			●			●	●		●		●	●	
200÷600m		●			●			●			●		
800÷2000m				●					●	●			
To	●					●	●	●	●			●	●

Graßmann-Simba GW

2 Röhren
2 Kreise
G-Rü-R-GW

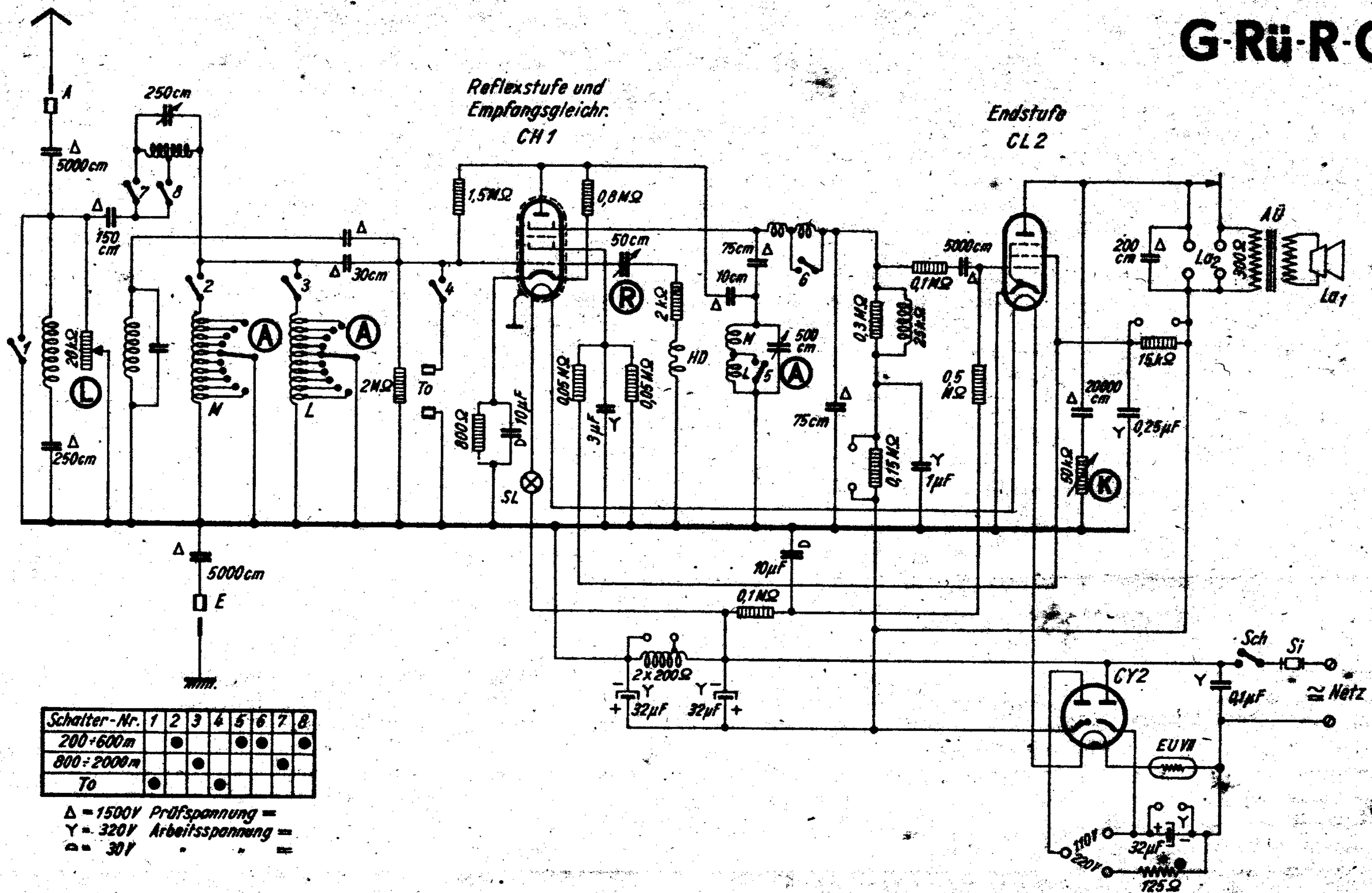

Schalter-Nr.	1	2	3	4	5	6	7	8
200÷600m		●			●	●		●
800÷2000m			●				●	
To	●			●				

Δ = 1500V Prüfspannung =
Y = 320V Arbeitsspannung =
⌂ = 30V " " =

Graßmann-Simba W

2 Röhren
2 Kreise
G-Rü-R-W

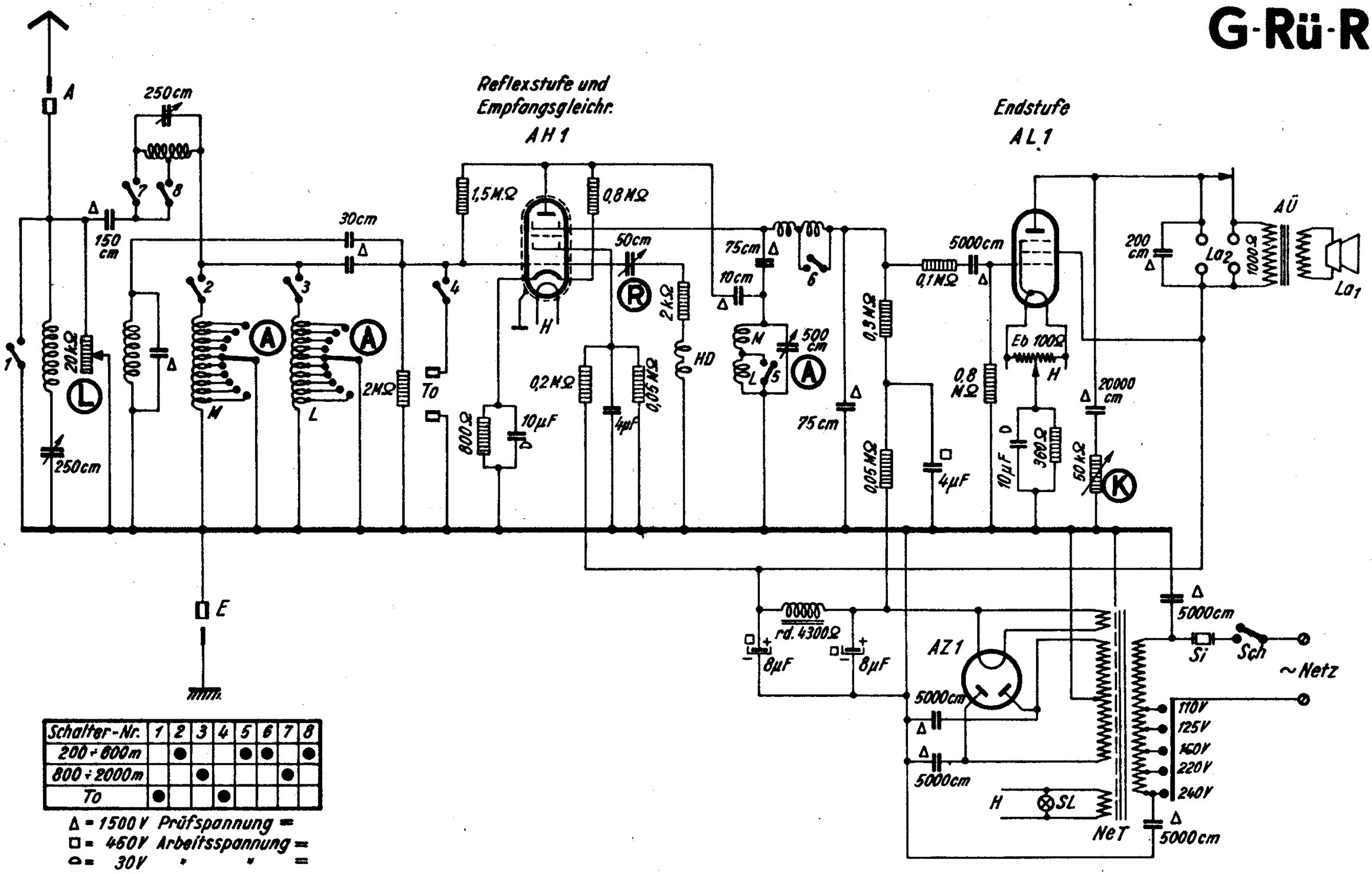

Schalter-Nr.	1	2	3	4	5	6	7	8
200÷600m		●			●	●		●
800÷2000m			●				●	
To	●			●				

Δ = 1500V Prüfspannung =
□ = 450V Arbeitsspannung =
○ = 30V " " =

Graßmann-Tabora II

3 Röhren
4 Kreise
S-W

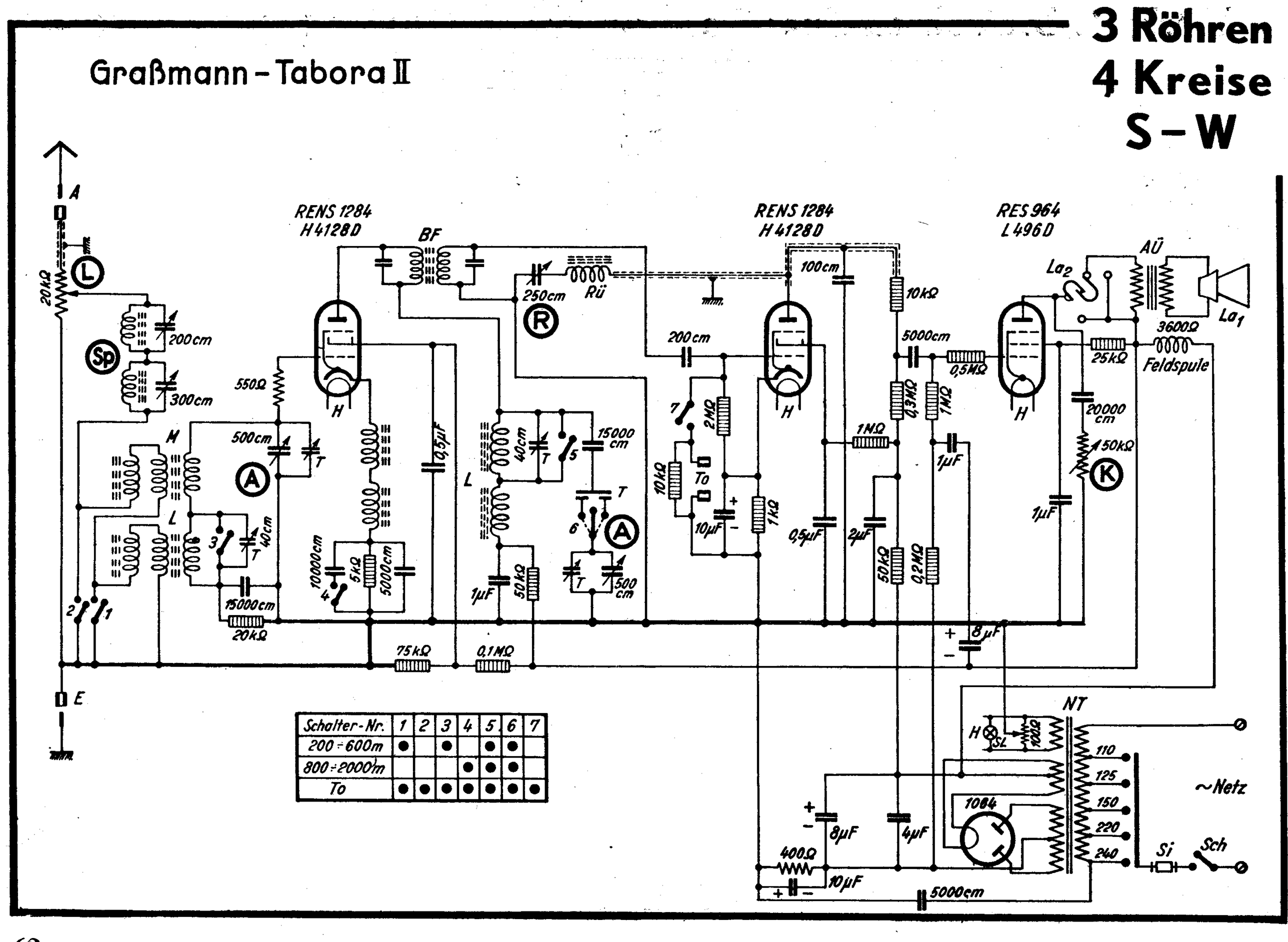

Schalter-Nr.	1	2	3	4	5	6	7
200÷600m	●		●		●	●	
800÷2000m				●	●	●	
To	●	●	●	●	●	●	●

Graßmann-Togo
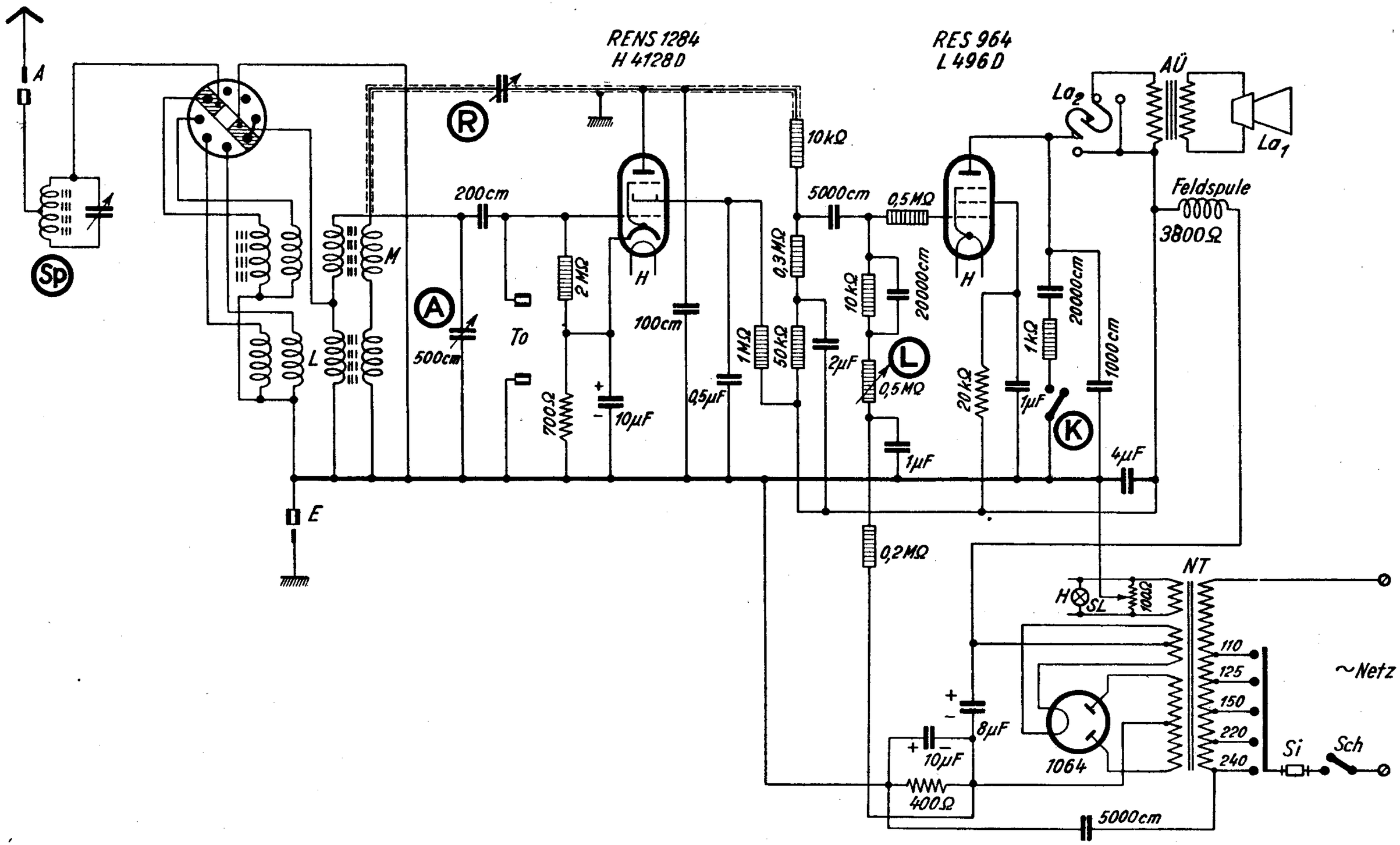
2 Röhren
1 Kreis
G-Rü-W