# Schaltbild zum Ortsempfänger Type E1001.

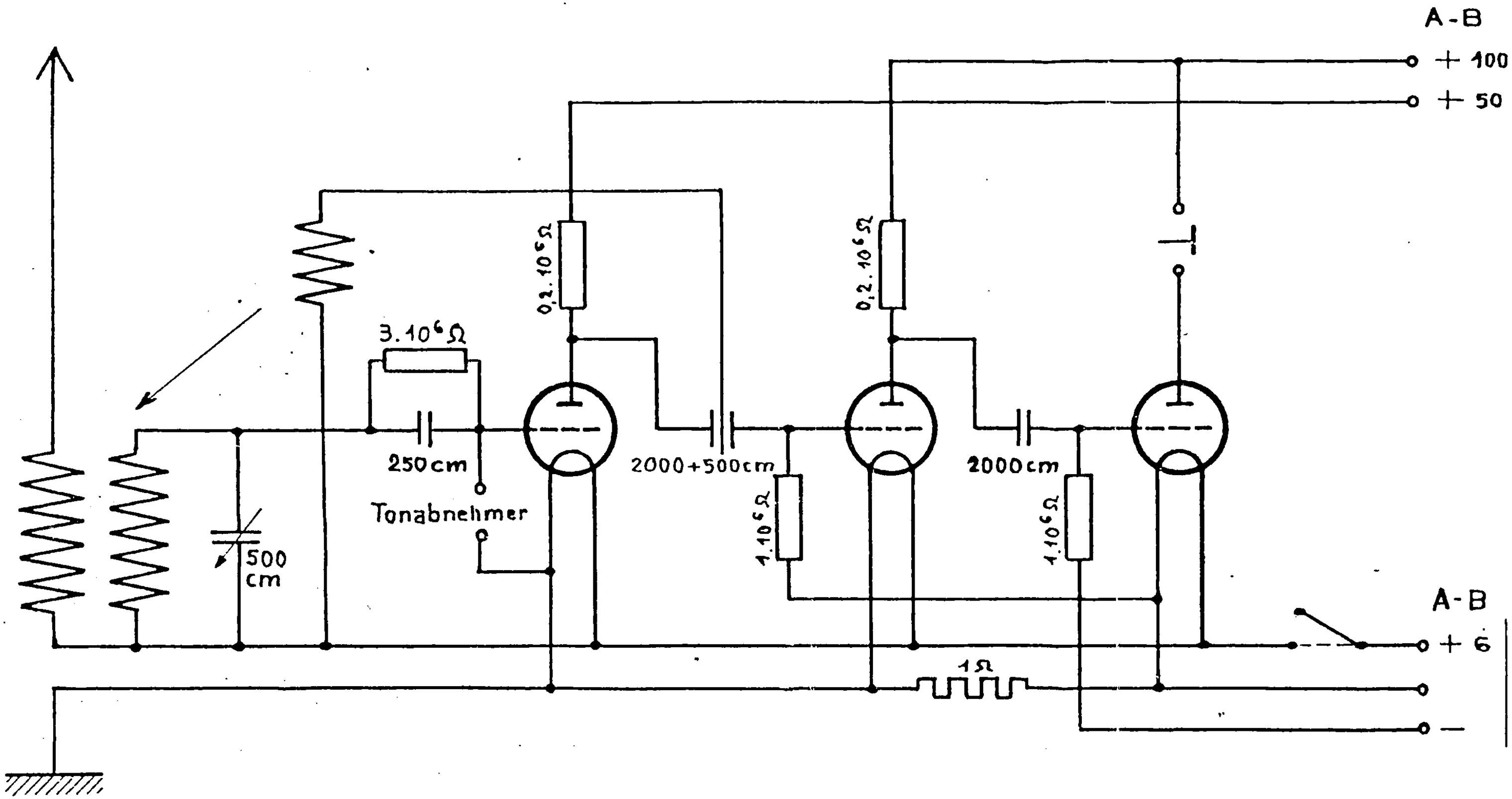


| Schaltbild zum Ortsempfänger Type E1001. | | | |
|---|---|---|---|
| Konstr. | Datum | Owin Radio-Apparate Fabrik<br>Gesellschaft mit beschränkter Haftung | S.108. |
| | 9.11.29 | | |

Info: R. Herzog

# OWIN E 22 W

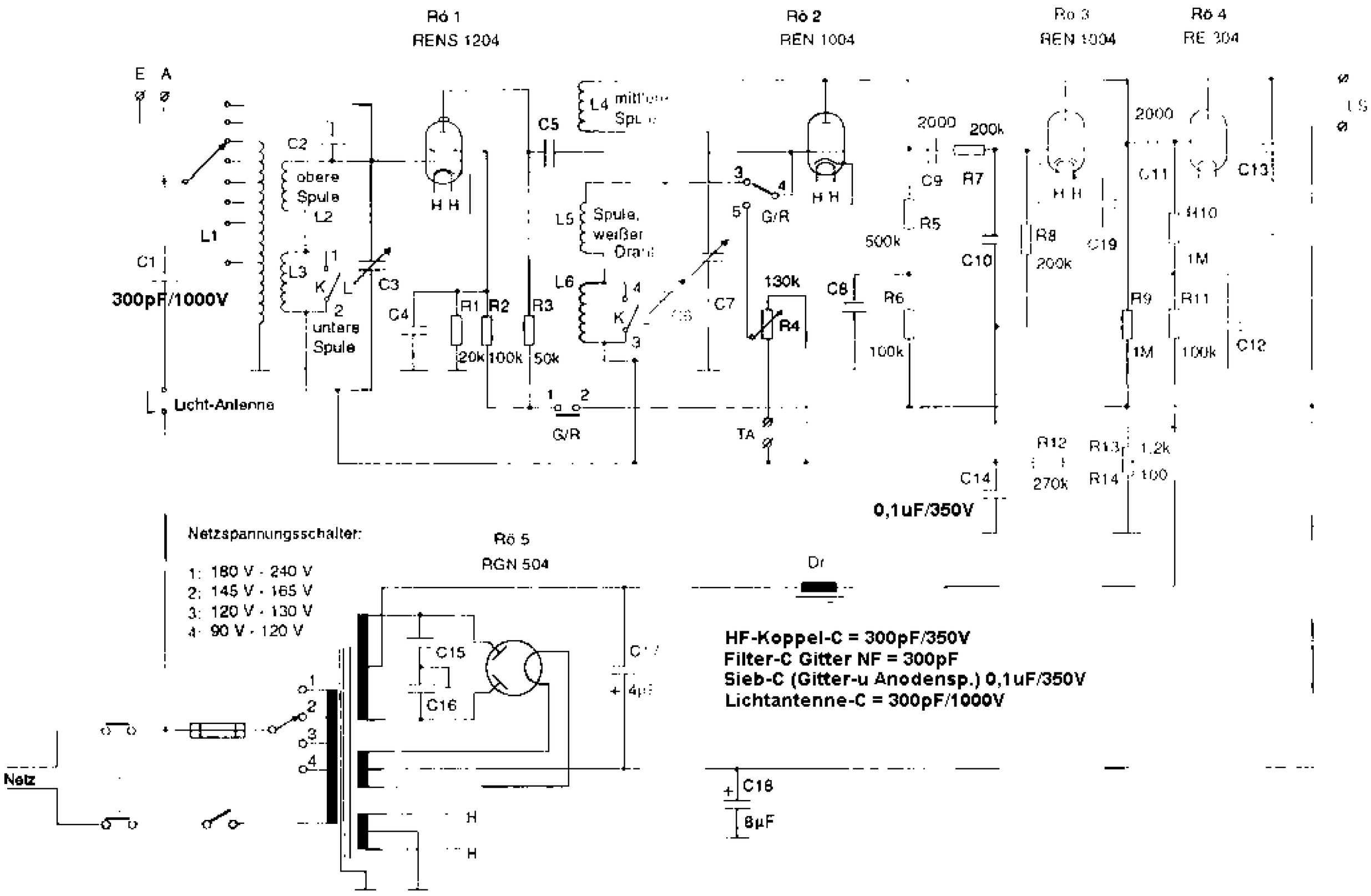
Rö 1
RENS 1204
Rö 2
REN 1004
Rö 3
REN 1004
Rö 4
RE 304
Rö 5
RGN 504
E A
C1
300pF/1000V
Licht-Antenne
L1
C2
obere Spule L2
L3
K/L
C3
unters Spule
C4
R1 20k
R2 100k
R3 50k
C5
L4 mittlere Spule
L5 Spule, weißer Draht
L6
K
C7
G/R
130k
R4
TA
C8
R5 500k
R6 100k
2000
200k
C9
R7
C10
R8 200k
C19
R9 1M
C11
C13
R10 1M
R11 100k
C12
R12 270k
R13 1.2k
R14 100
C14
0,1uF/350V
Dr
Netzspannungsschalter:
1: 180 V - 240 V
2: 145 V - 165 V
3: 120 V - 130 V
4: 90 V - 120 V
C15
C16
4µF
Netz
HF-Koppel-C = 300pF/350V
Filter-C Gitter NF = 300pF
Sieb-C (Gitter-u Anodensp.) 0,1uF/350V
Lichtantenne-C = 300pF/1000V
C18
8µF

# OWIN E 23 W

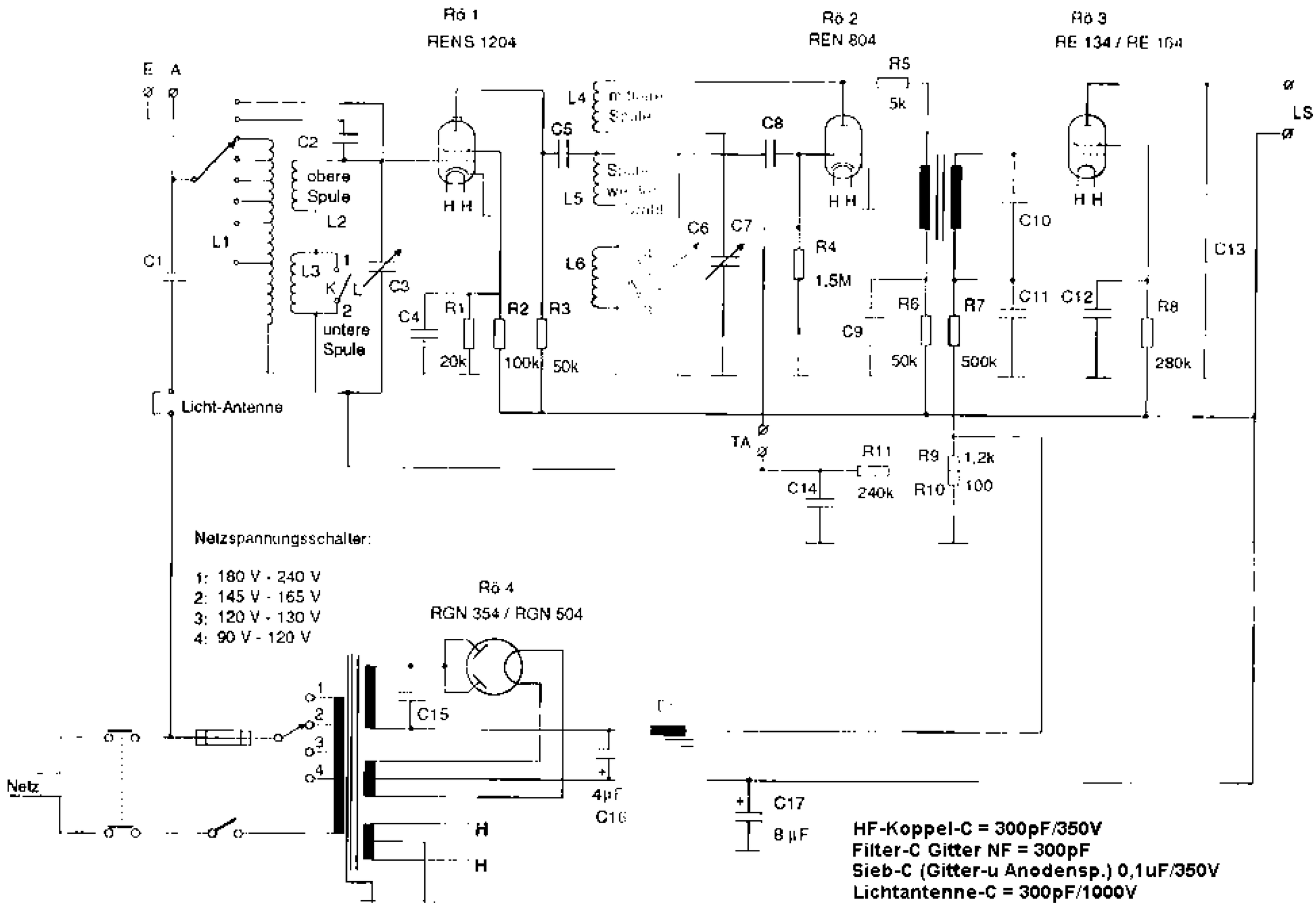
Rö 1
RENS 1204
Rö 2
REN 804
Rö 3
RE 134 / RE 104
E
A
C1
C2
obere Spule
L2
L1
L3
1
K
L
2
C3
untere Spule
C4
R1
20k
R2
100k
R3
50k
L4
C5
L5
L6
C6
C7
C8
R4
1.5M
R5
5k
R6
50k
R7
500k
C9
C10
C11
C12
R8
280k
C13
LS
Licht-Antenne
TA
R11
240k
R9
1,2k
R10
100
C14
Netzspannungsschalter:
1: 180 V - 240 V
2: 145 V - 165 V
3: 120 V - 130 V
4: 90 V - 120 V
Rö 4
RGN 354 / RGN 504
C15
Netz
4µF
C16
C17
8 µF
H
HF-Koppel-C = 300pF/350V
Filter-C Gitter NF = 300pF
Sieb-C (Gitter-u Anodensp.) 0,1uF/350V
Lichtantenne-C = 300pF/1000V

# Owin-Ferroton E 56 W

**3 Röhren**
**2 Kreise**
**G-Rü-W**

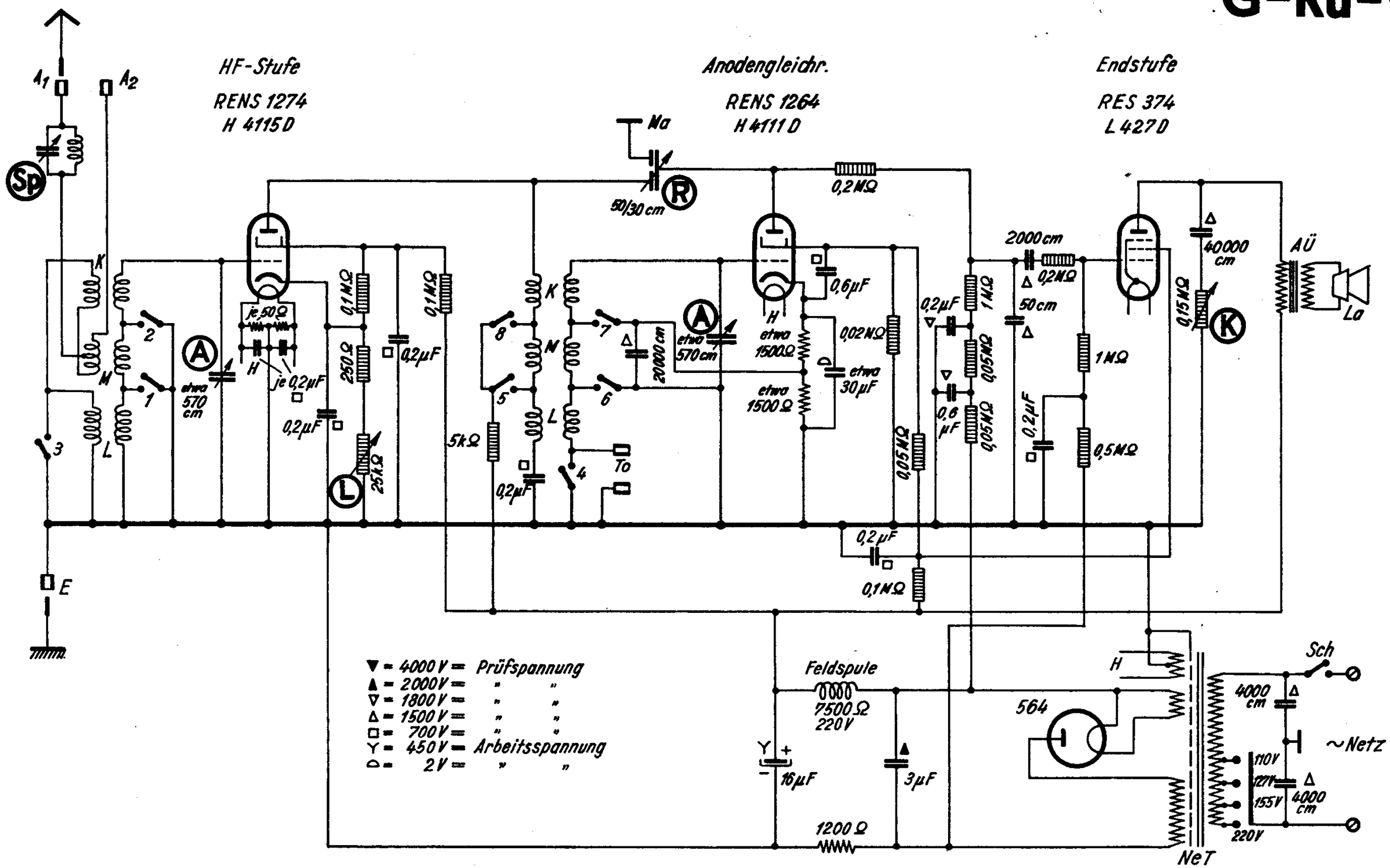

# Owin-Weltklang E/L 62 B

**5 Röhren**
**2 Kreise**
**G-Rü-B**

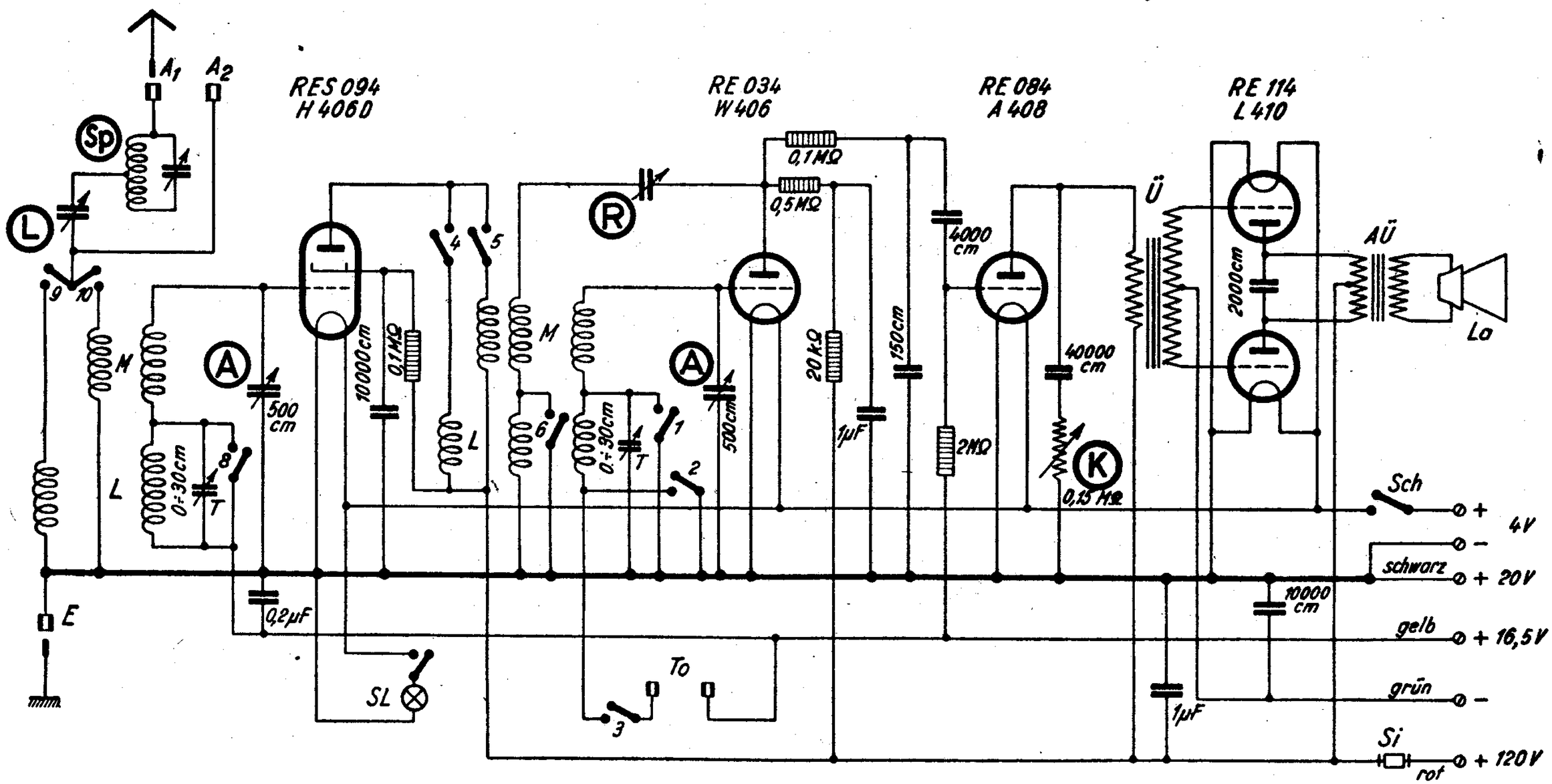


| Schalter-Nr. | 1 | 2 | 3 | 4 | 5 | 6 | 7 | 8 | 9 | 10 |
|---|---|---|---|---|---|---|---|---|---|---|
| 200-600m | ● | ● | | | ● | ● | ● | ● | | ● |
| 800-2000m | | ● | | ● | | | ● | | ● | |
| To | | | ● | | | | ● | | | |

# Owin-Kofferempfänger K 36

**5 Röhren**
**3 Kreise**
**G-Rü-B**

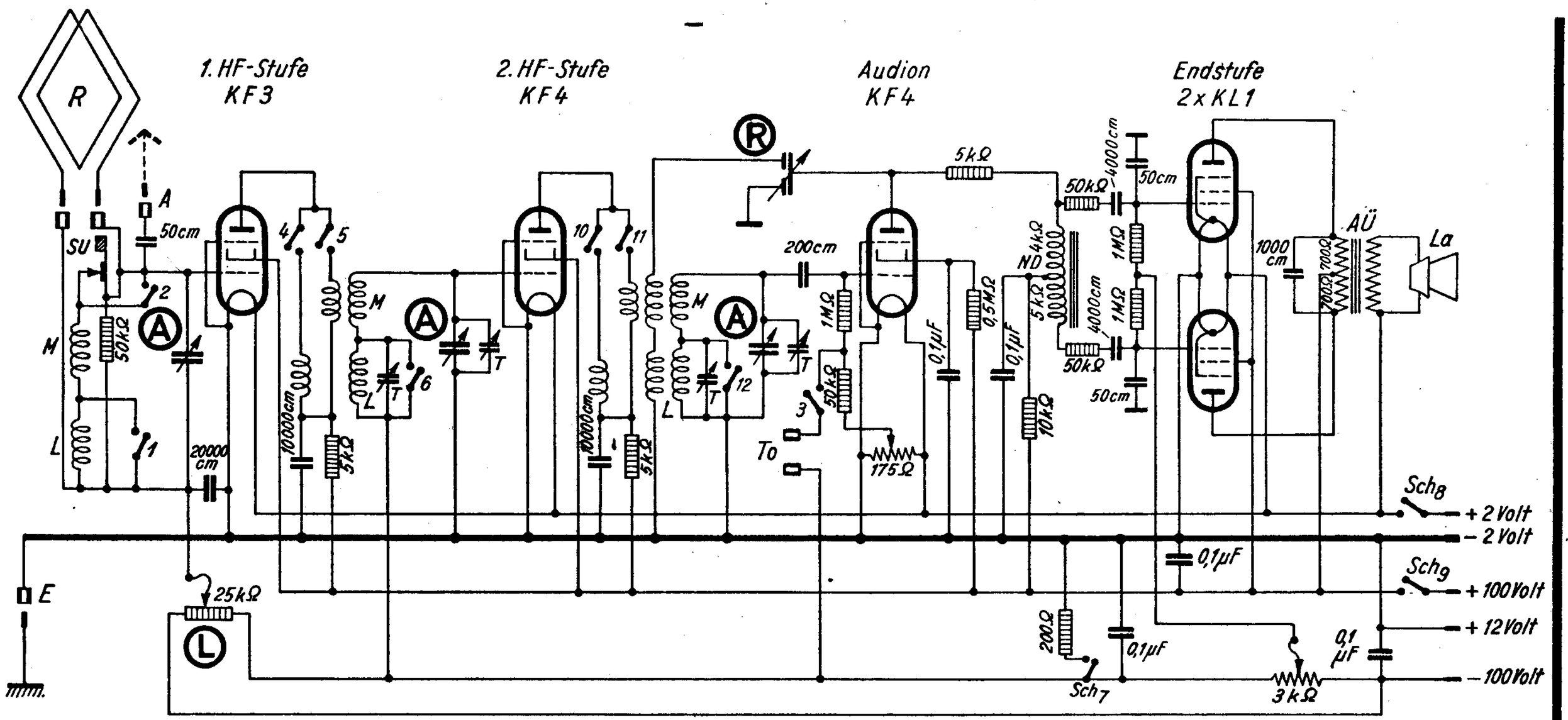


| Schalter-Nr. | 1 | 2 | 3 | 4 | 5 | 6 | 7 | 8 | 9 | 10 | 11 | 12 |
|---|---|---|---|---|---|---|---|---|---|---|---|---|
| Mittel | ● | ● | | | ● | ● | ● | ● | ● | | ● | ● |
| Lang | | | | ● | | | ● | ● | ● | ● | | |
| To | | | ● | | | | ● | ● | ● | | | |

*Prüfspannung sämtlicher Kondensatoren = 1500 Volt*

# Owin L 101 G Trix

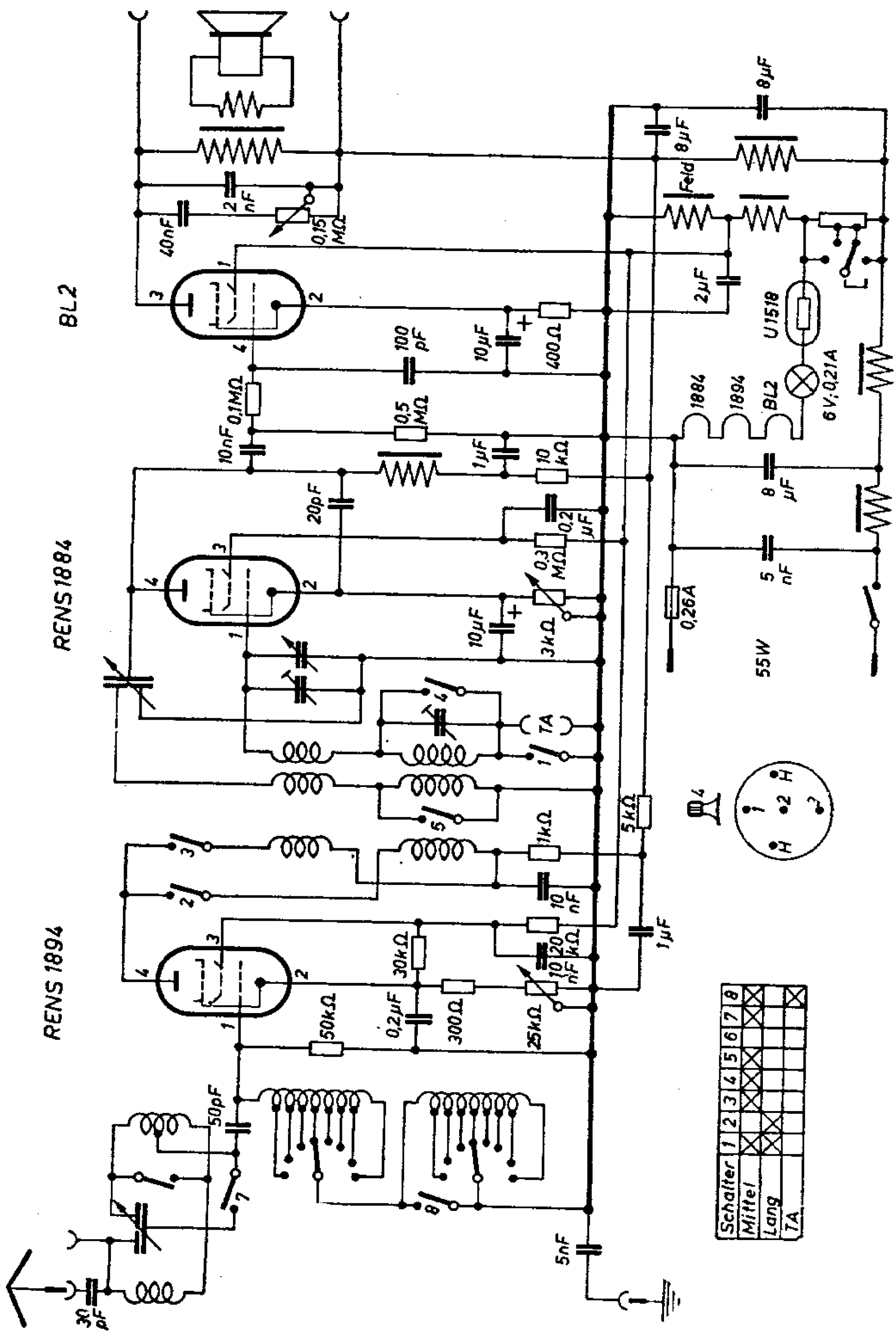

# Owin L 101 W Trix

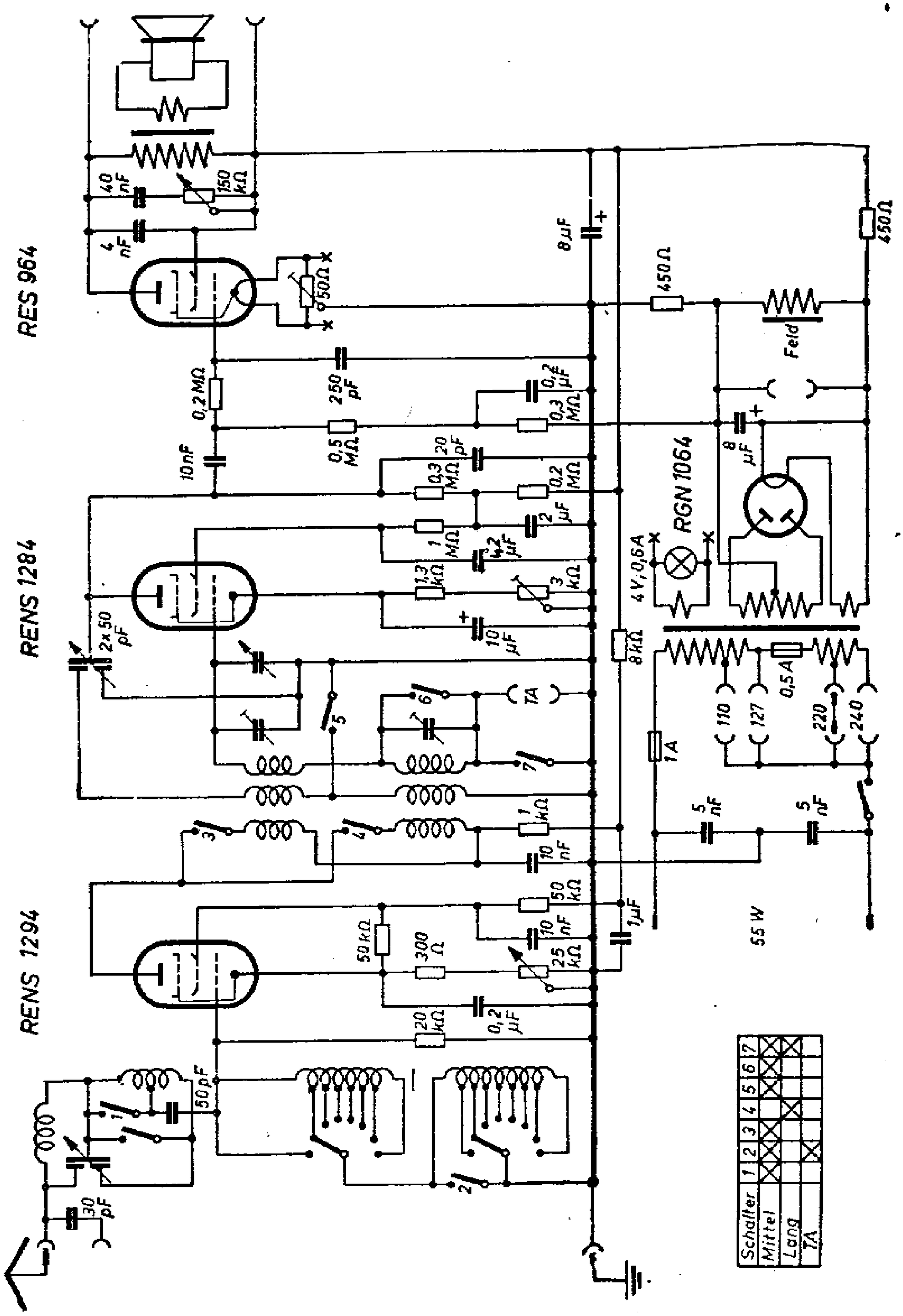

# Owin L 103 W Weltfahrer

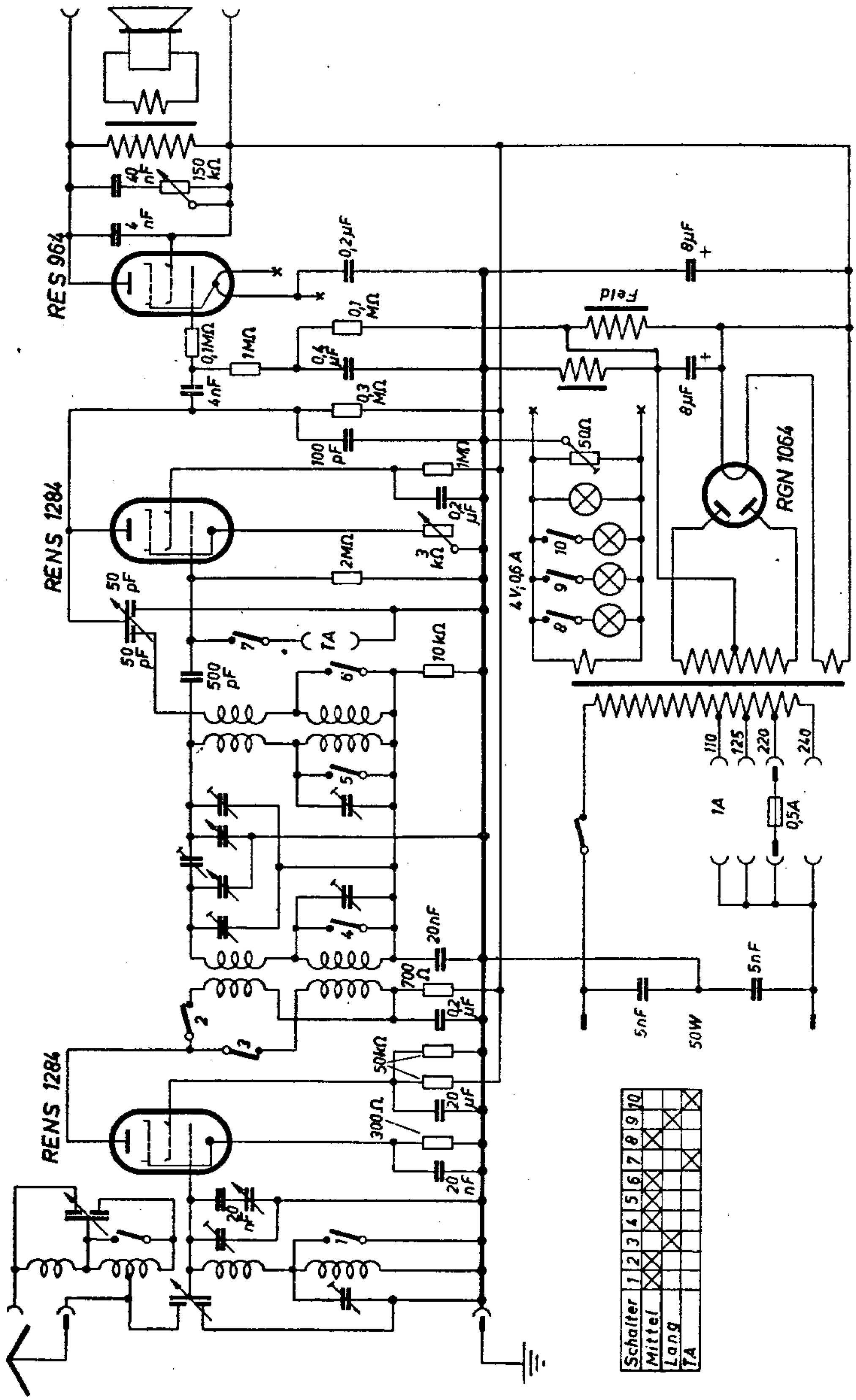

# Owin L 111 GW Kadett

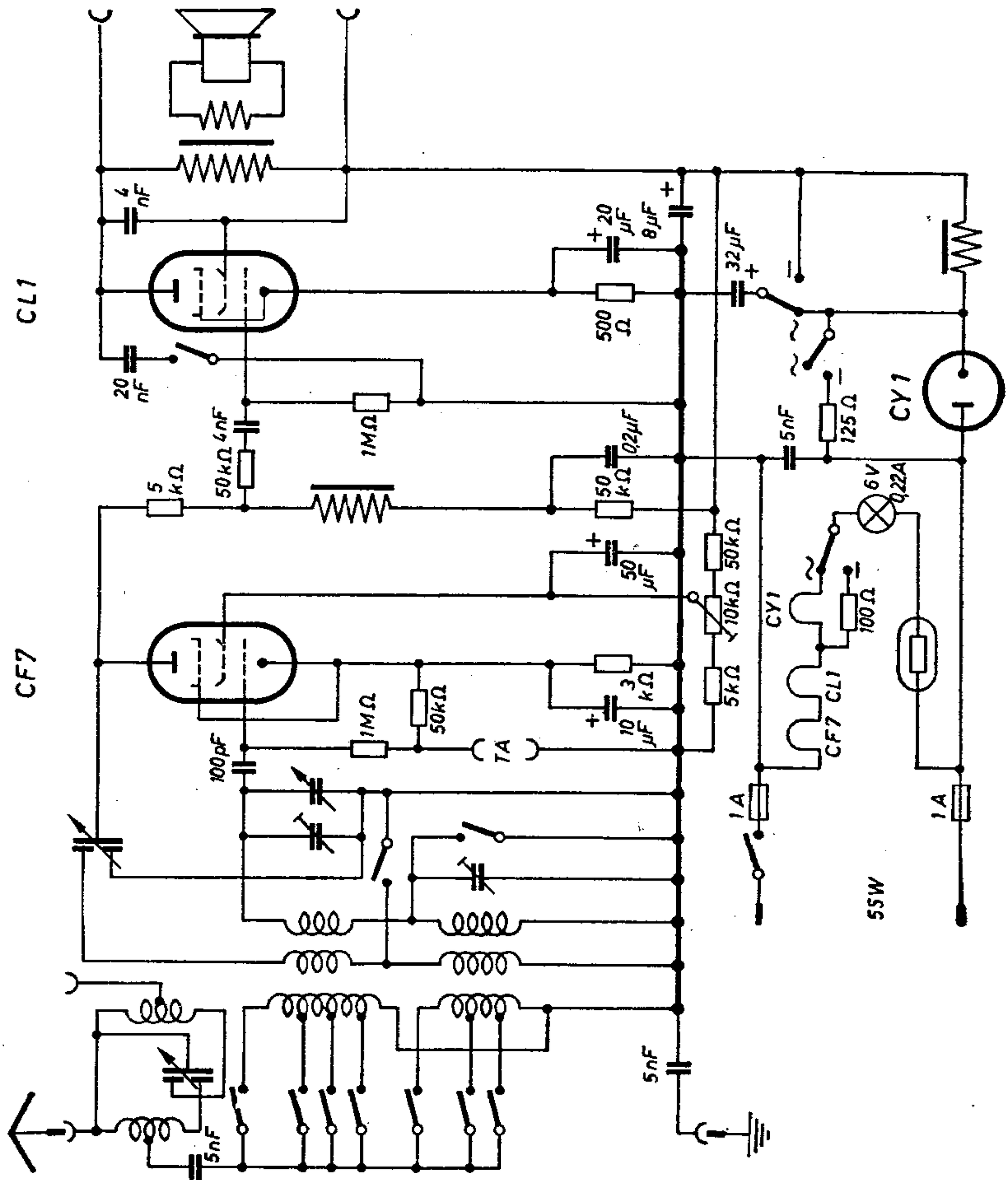

# Owin L 111 W Kadett

**2 Röhren**
**1 Kreis**
**G-Rü-W**

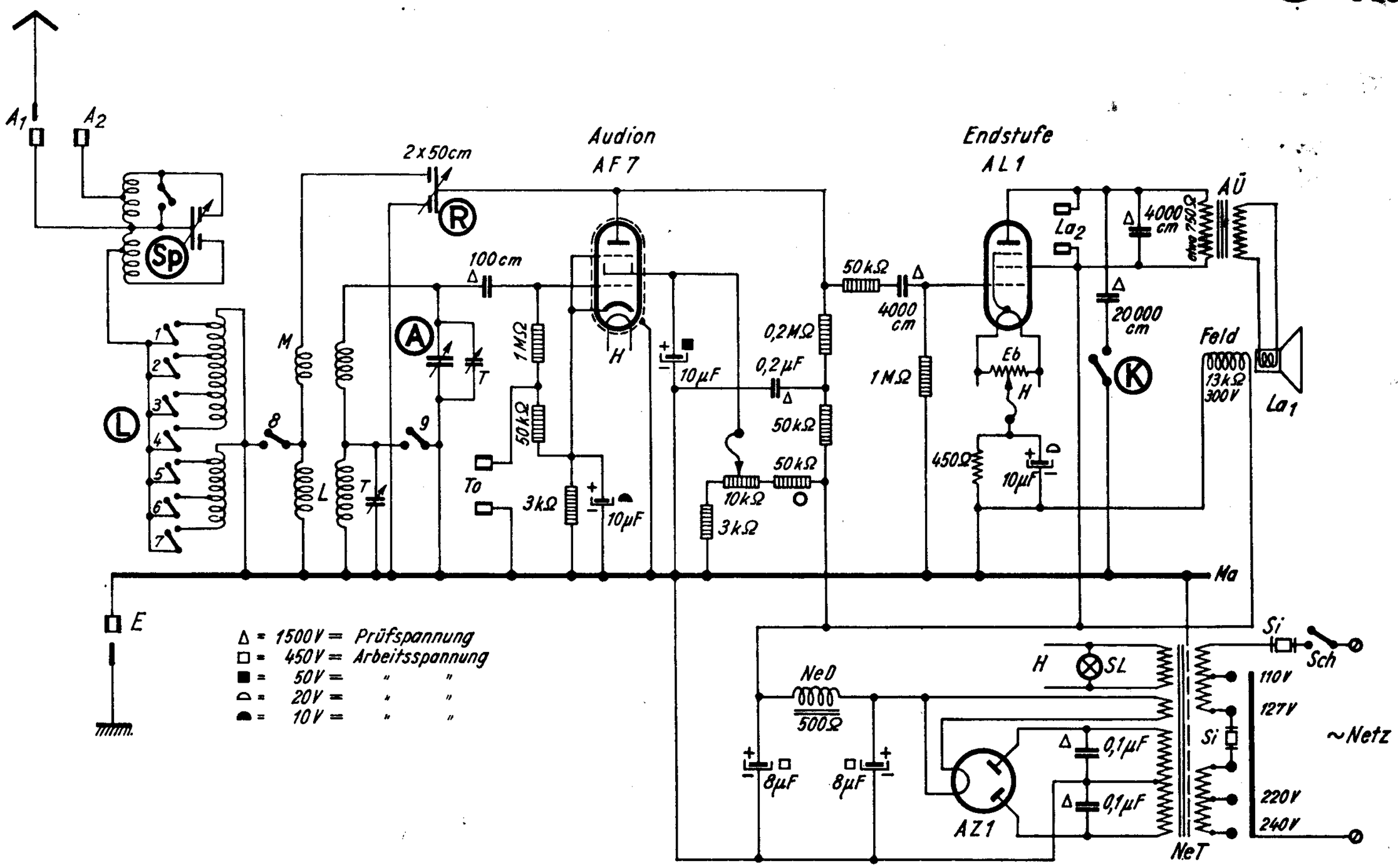

# Owin L122 W Adjutant

**3 Röhren**
**2 Kreise**
**G-Rü-W**

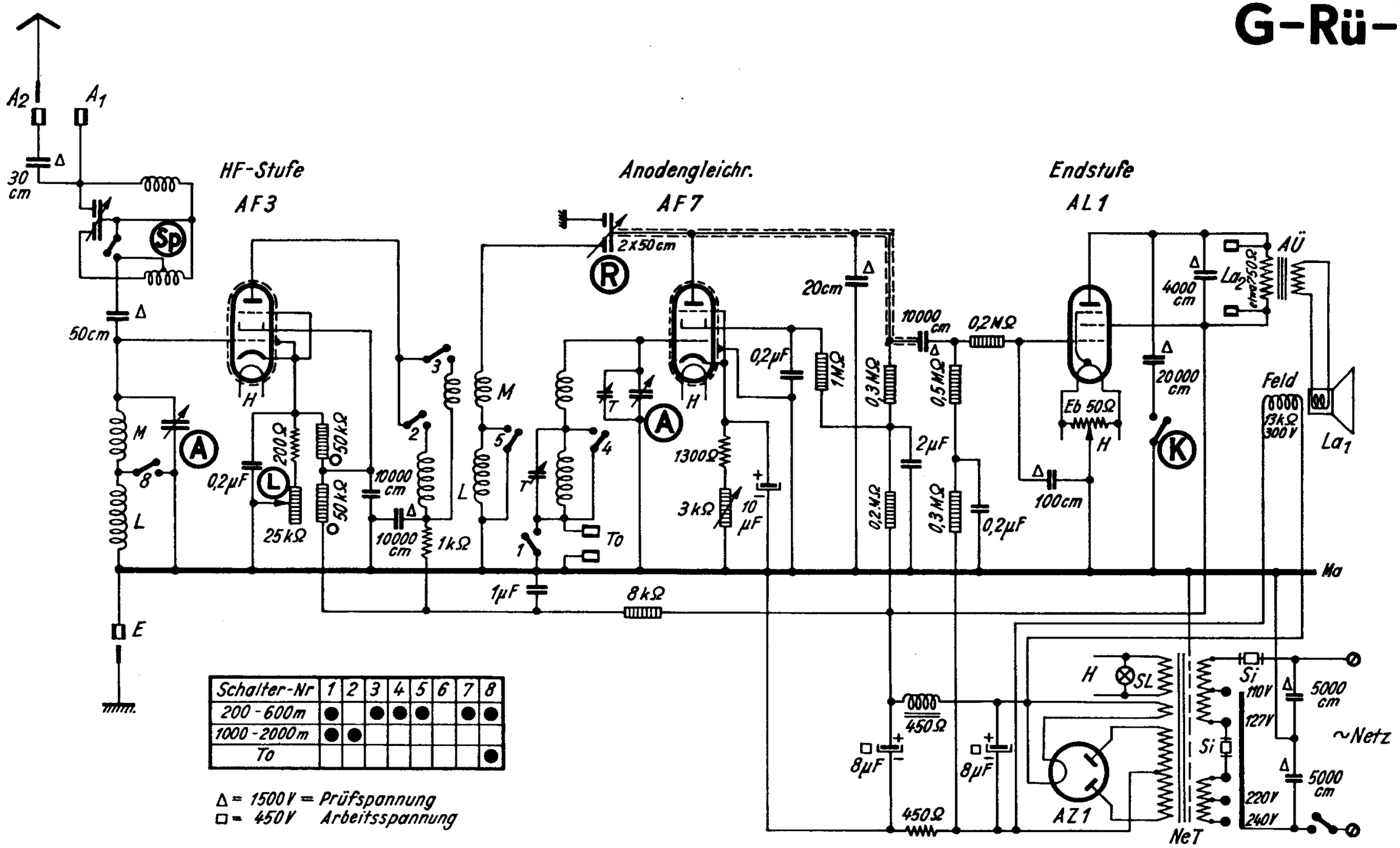


| Schalter-Nr | 1 | 2 | 3 | 4 | 5 | 6 | 7 | 8 |
|---|---|---|---|---|---|---|---|---|
| 200 - 600m | ● | | ● | ● | ● | | ● | ● |
| 1000 - 2000m | ● | ● | | | | | | |
| To | | | | | | | | ● |

Δ = 1500V = Prüfspannung
□ = 450V Arbeitsspannung

# Owin L 123 W Kommandant

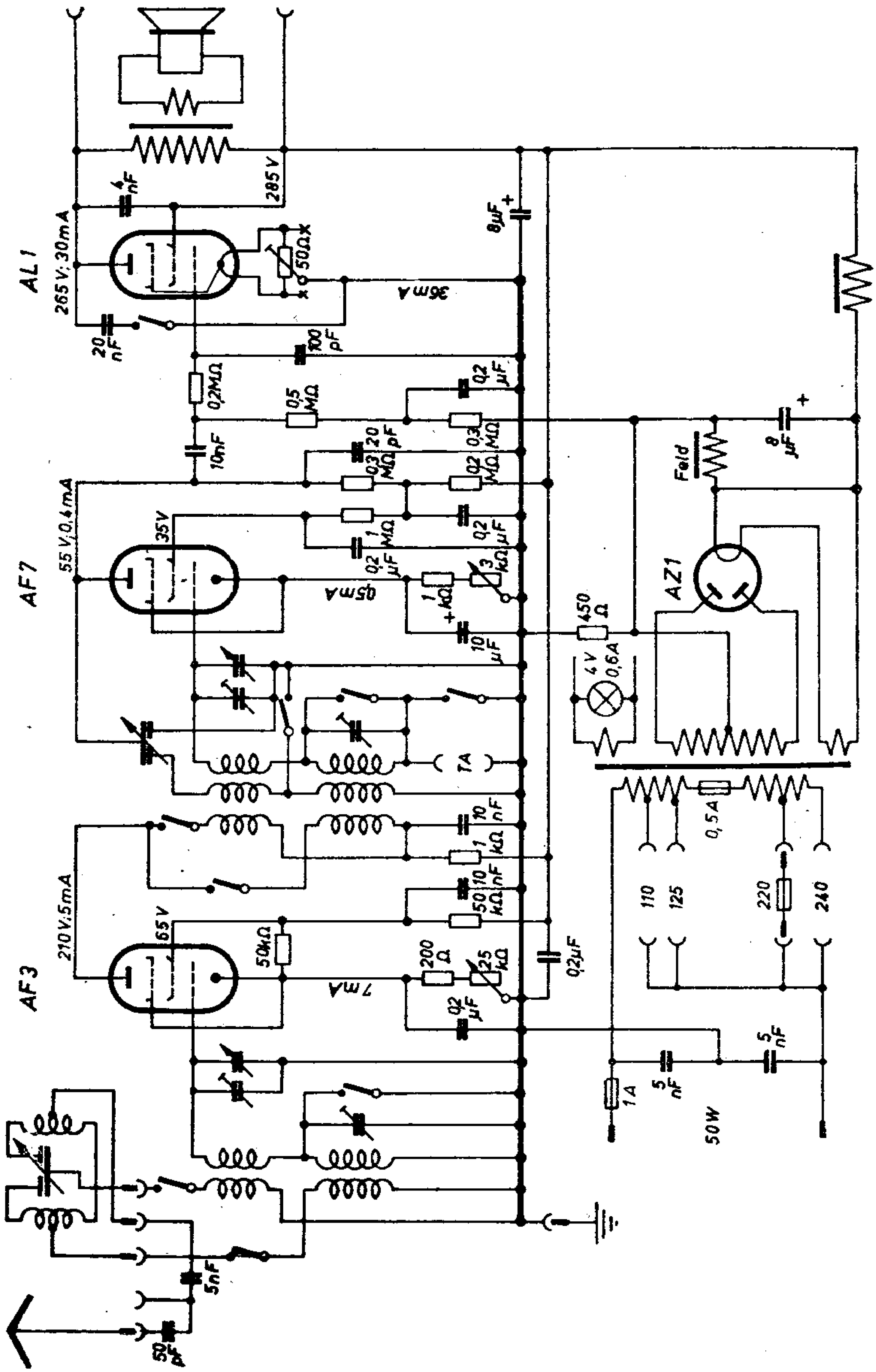

# Owin L133 GW Kapitän

**3 Röhren**
**2 Kreise**
**G-Rü-GW**

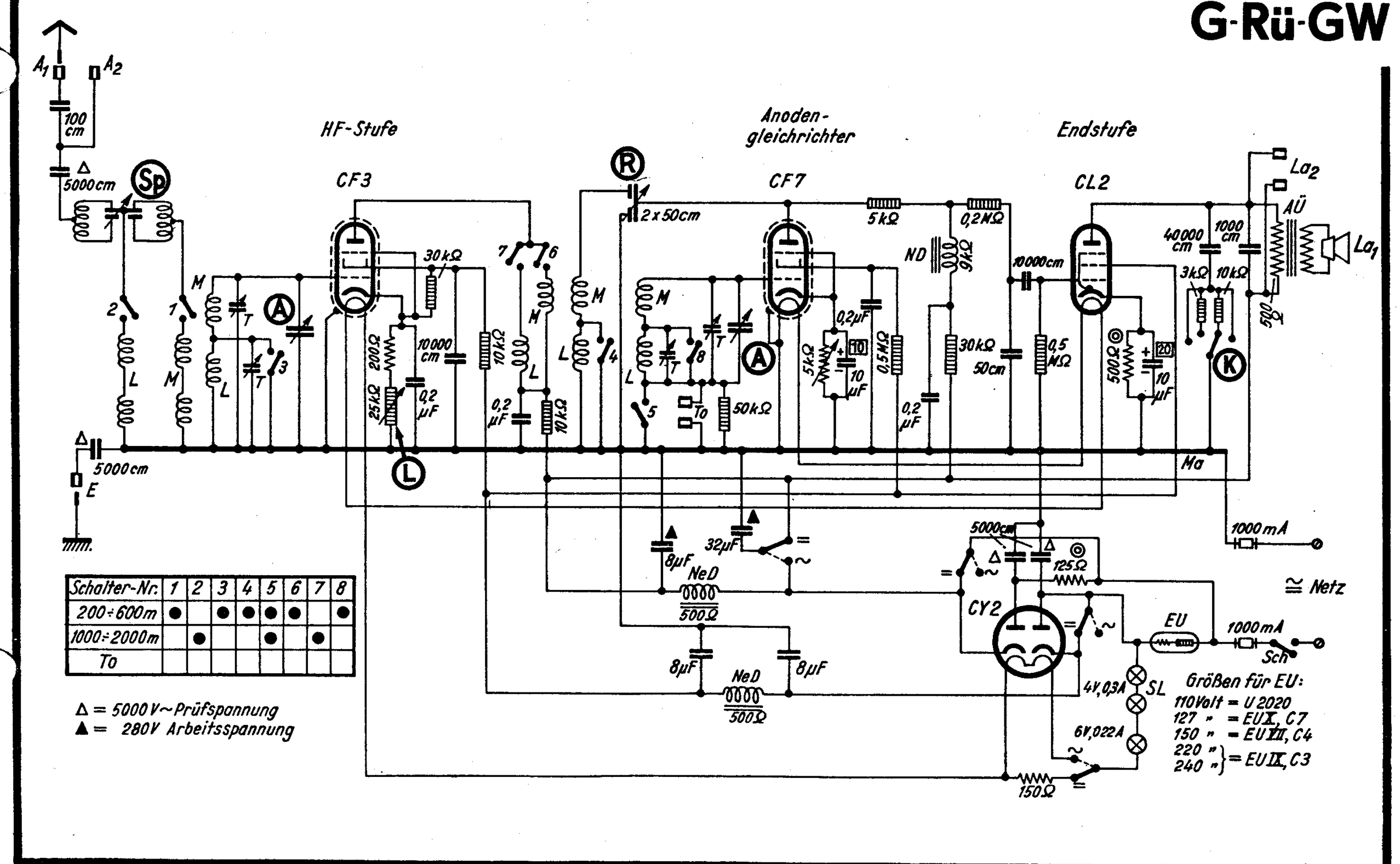

# Owin L 133 W Kapitän

**3 Röhren**
**2 Kreise**
**G-Rü-W**

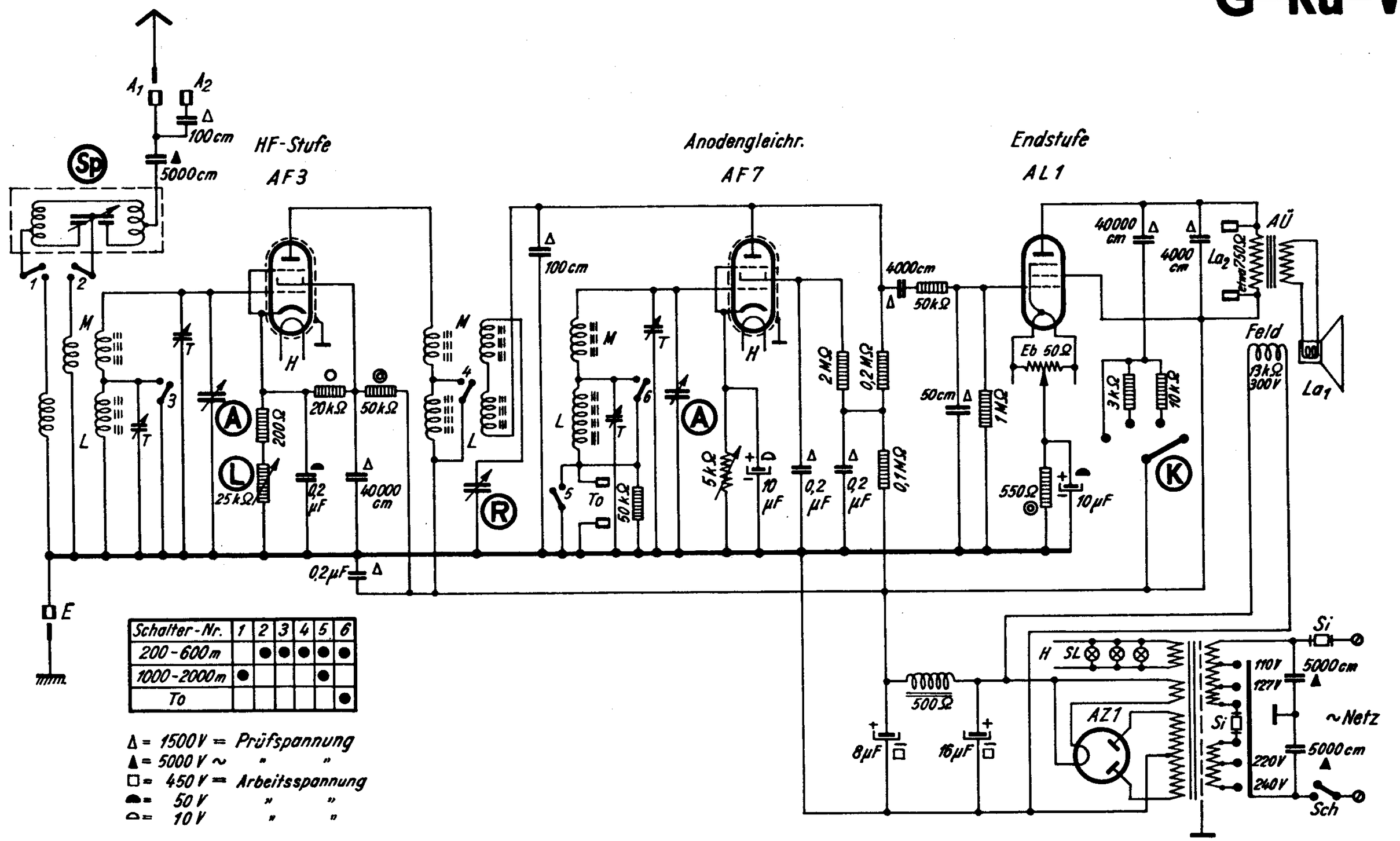


| Schalter-Nr. | 1 | 2 | 3 | 4 | 5 | 6 |
|---|---|---|---|---|---|---|
| 200-600m | | ● | ● | ● | ● | ● |
| 1000-2000m | ● | | | | ● | |
| To | | | | | | ● |

Δ = 1500 V = Prüfspannung
▲ = 5000 V ~ " "
□ = 450 V = Arbeitsspannung
◓ = 50 V " "
◔ = 10 V " "

# Owin L 134 B und K 36

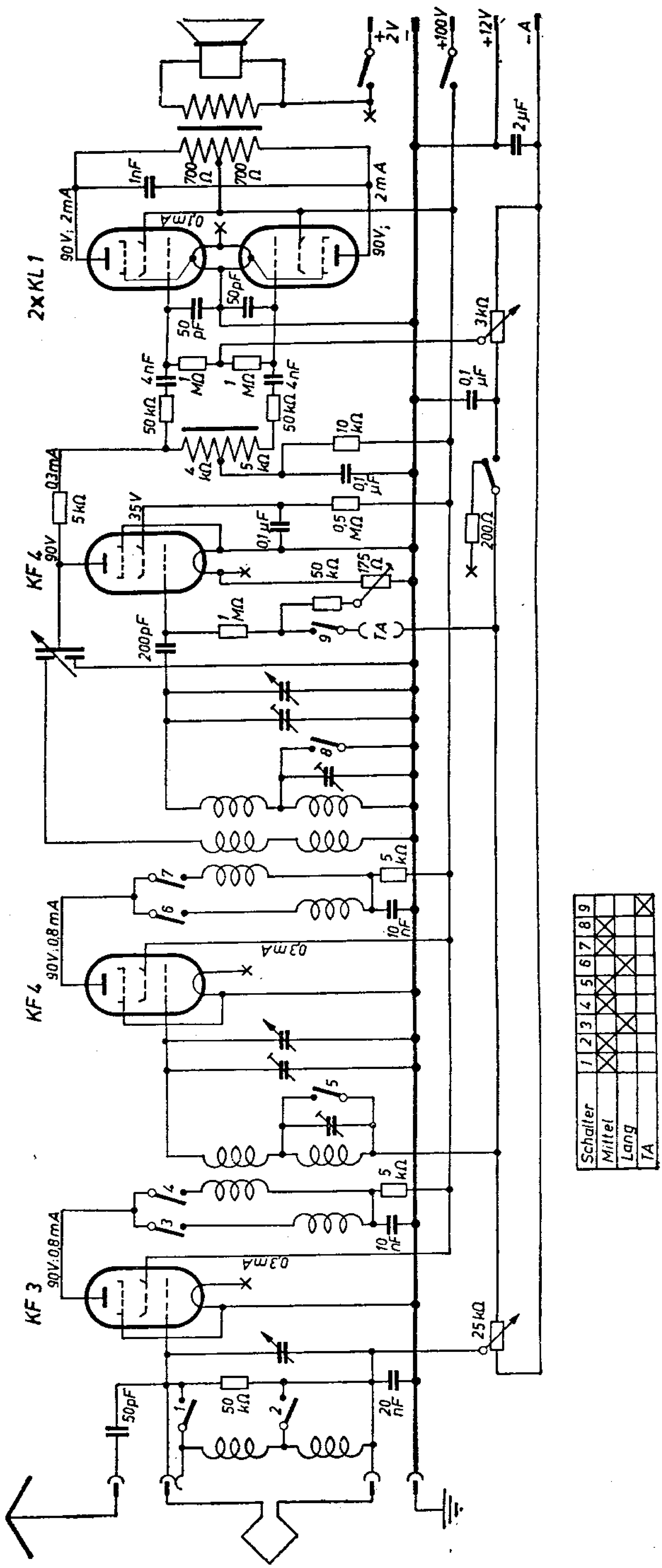

# Owin L 144 W General

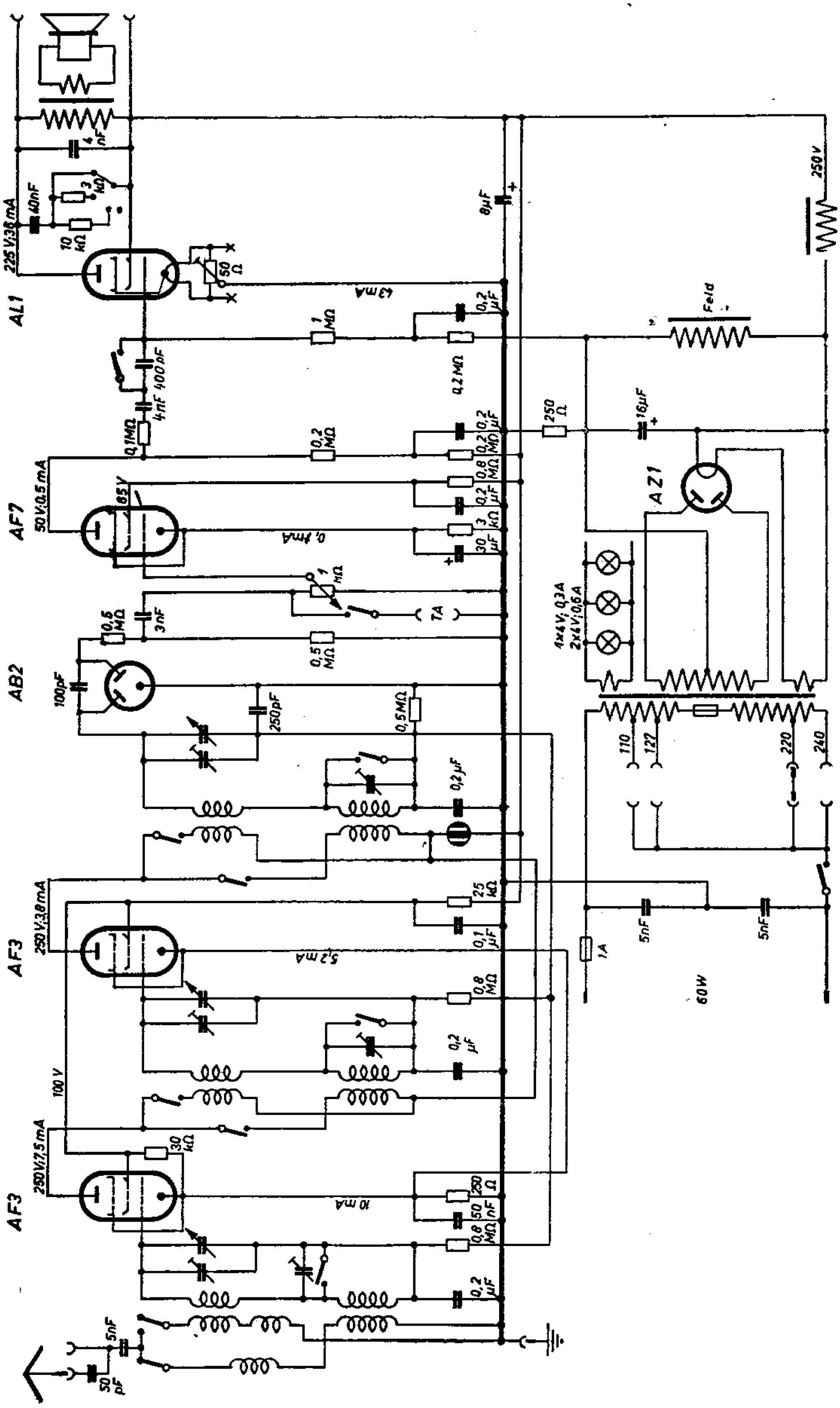

# Owin L 144 W General (ab Gerät Nr. 335110)

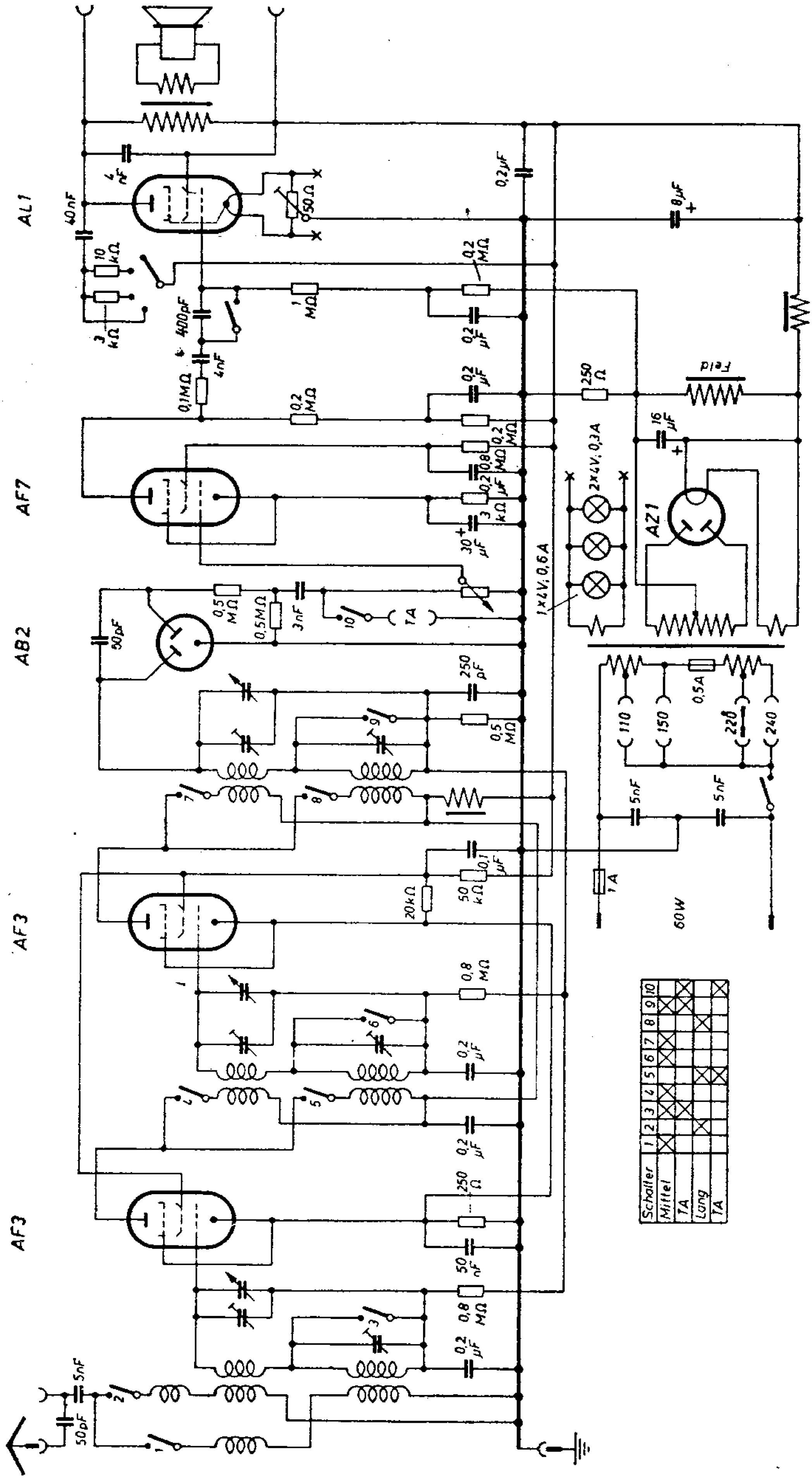

# Owin L 56 W und E 56 W

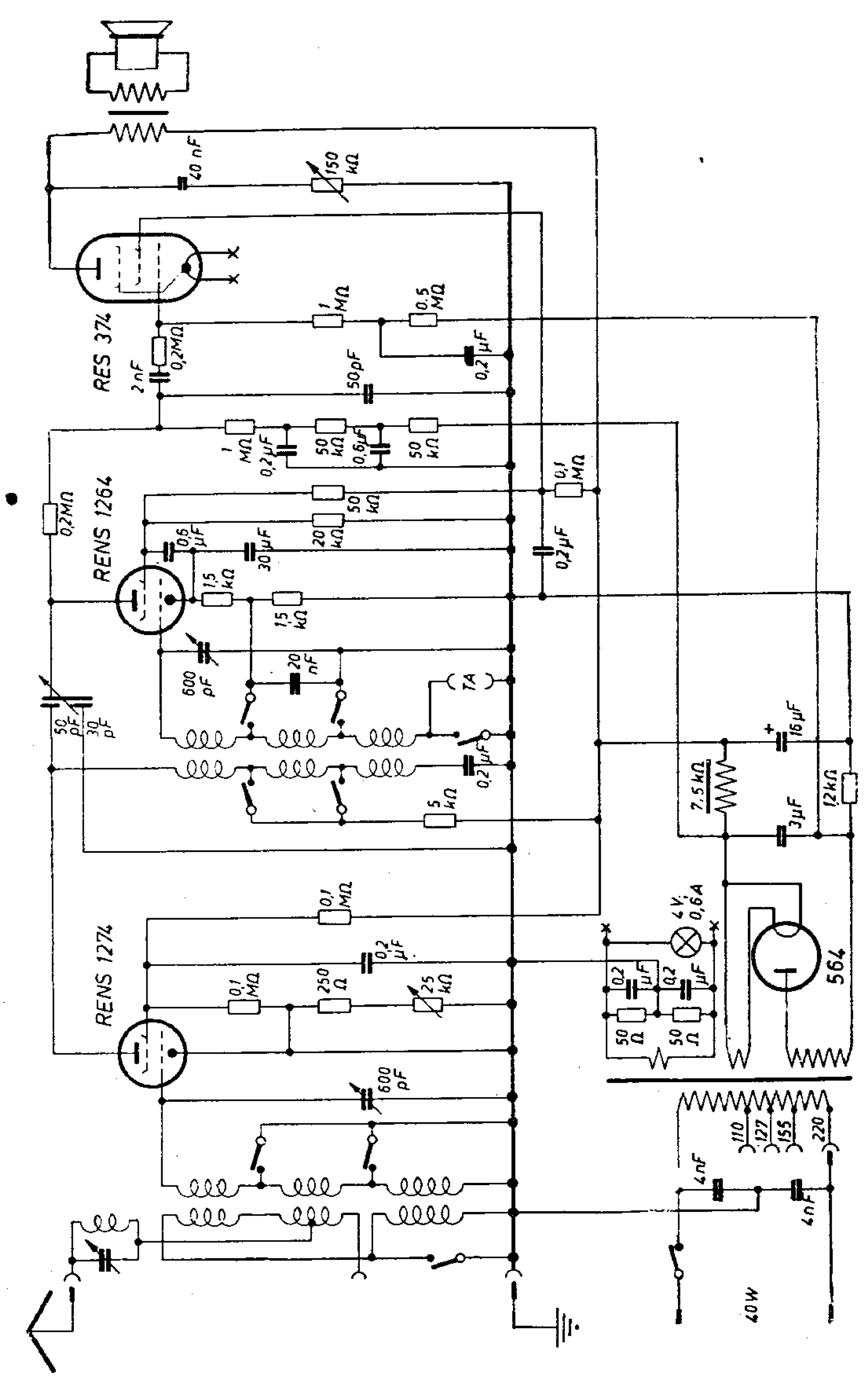

# Owin L 61 G

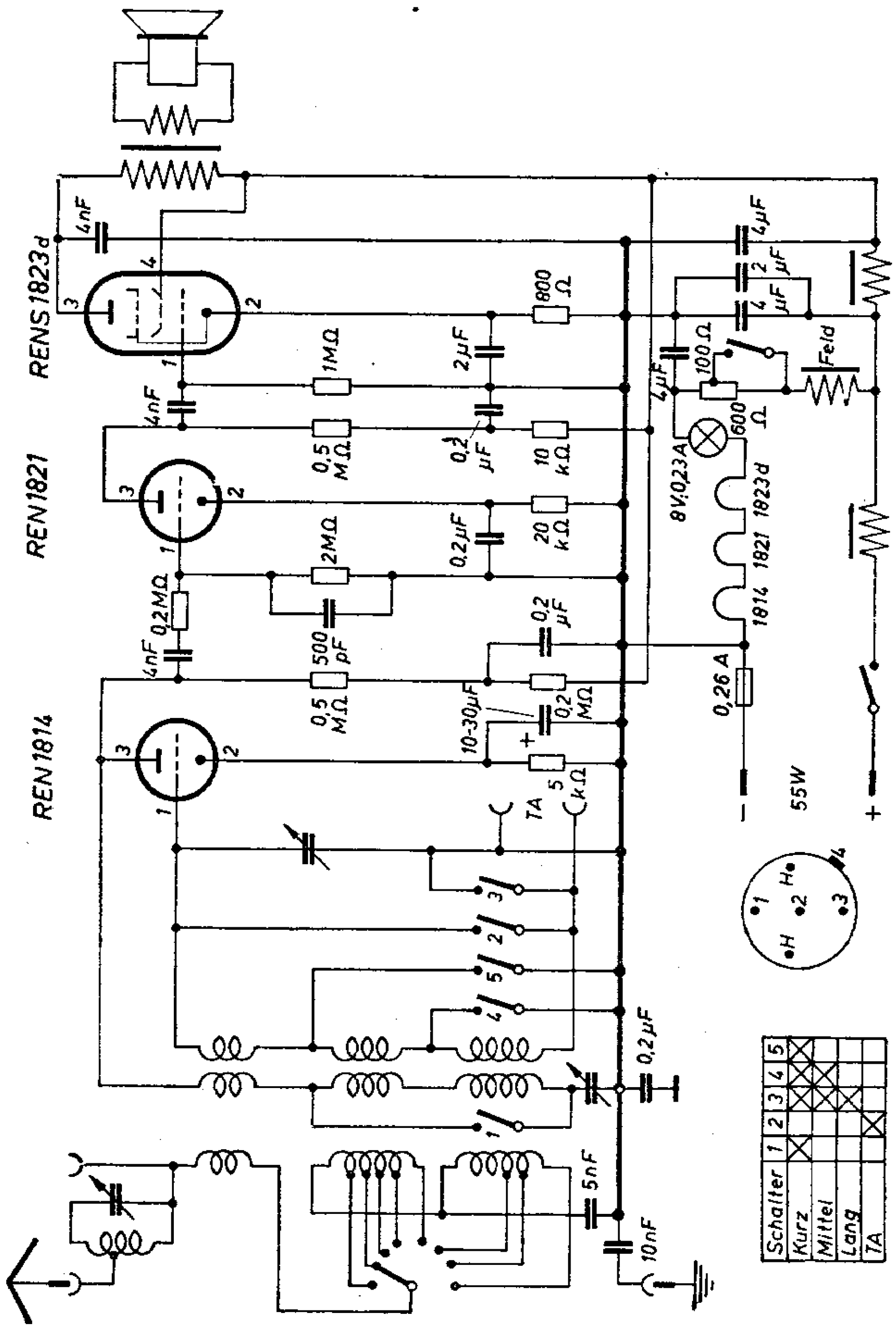
REN 1823d
REN 1821
REN 1814
4nF
0,2MΩ
1MΩ
0,5 MΩ
2MΩ
500 pF
2μF
0,2μF
800 Ω
10 kΩ
20 kΩ
0,2 μF
10-30μF
0,2 MΩ
5 kΩ
TA
4μF
2 μF
100 Ω
600 Ω
Feld
8V;0,23A
1821 1823d
1814
0,26 A
55W
5nF
10nF
Schalter
Kurz
Mittel
Lang
TA

# Owin L 61 W

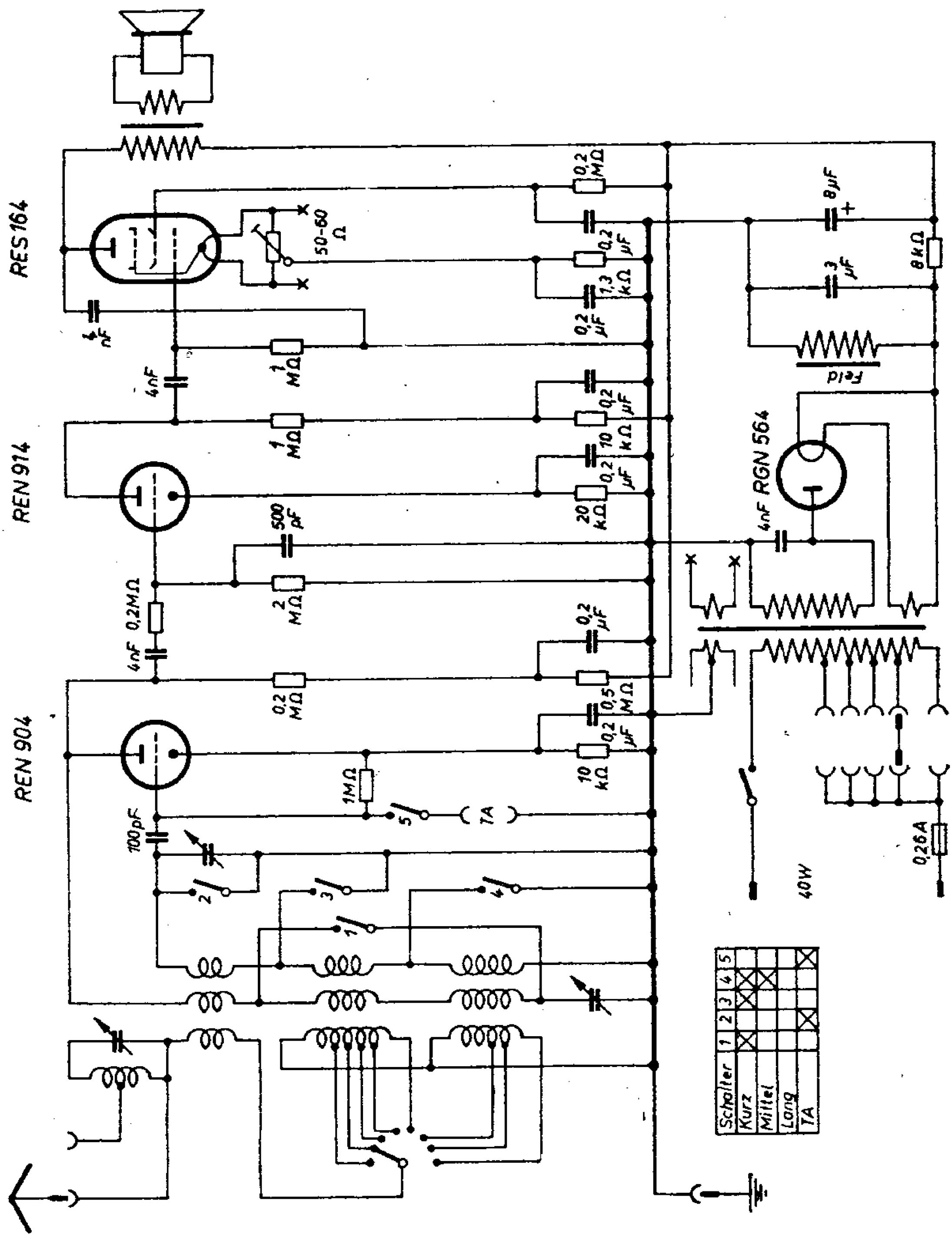
RES 164
REN 914
REN 904
RGN 564
Field
40W
0,26A
Schalter
Kurz
Mittel
Lang
TA

# Owin L 62 B Oekonom

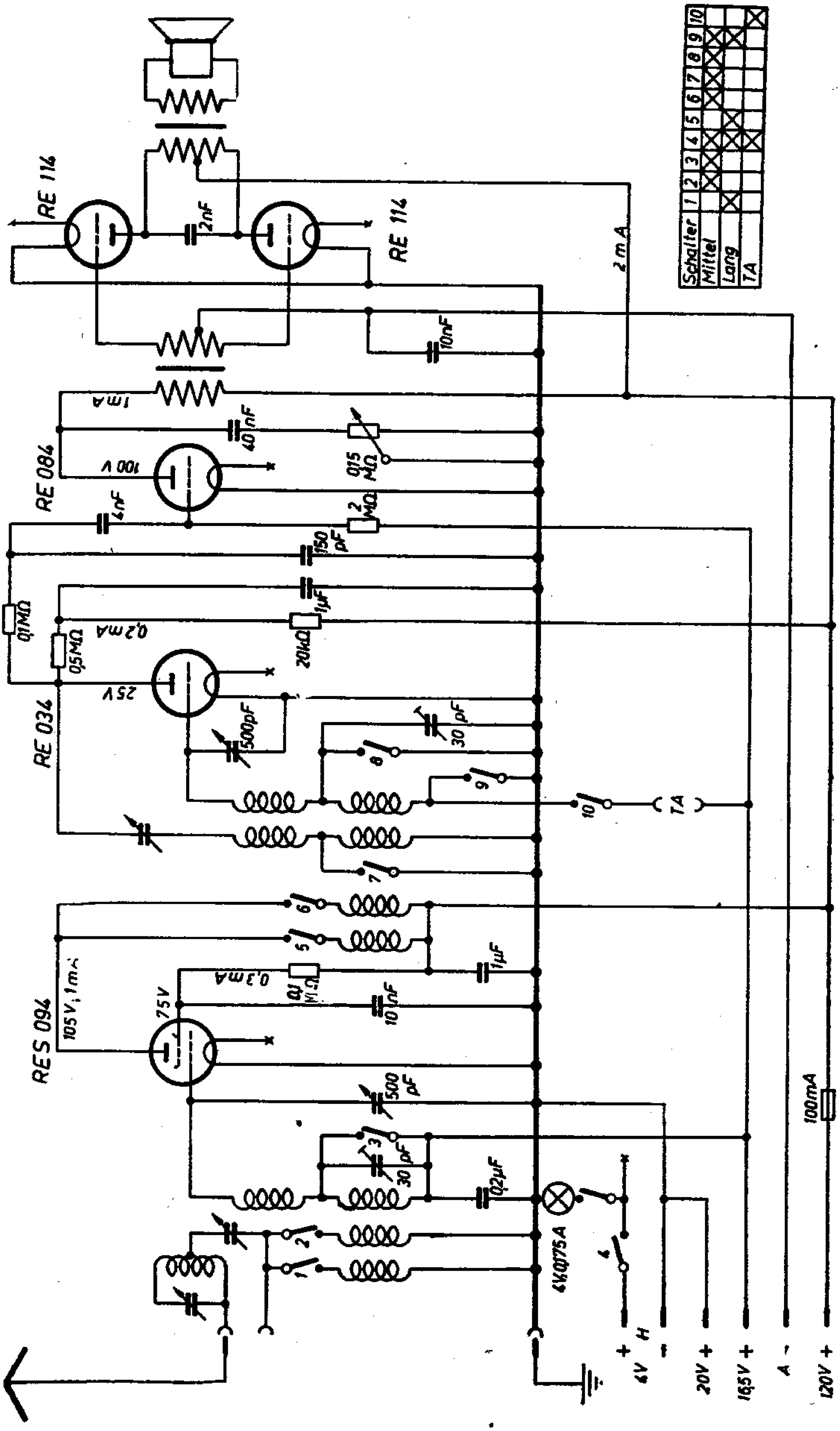

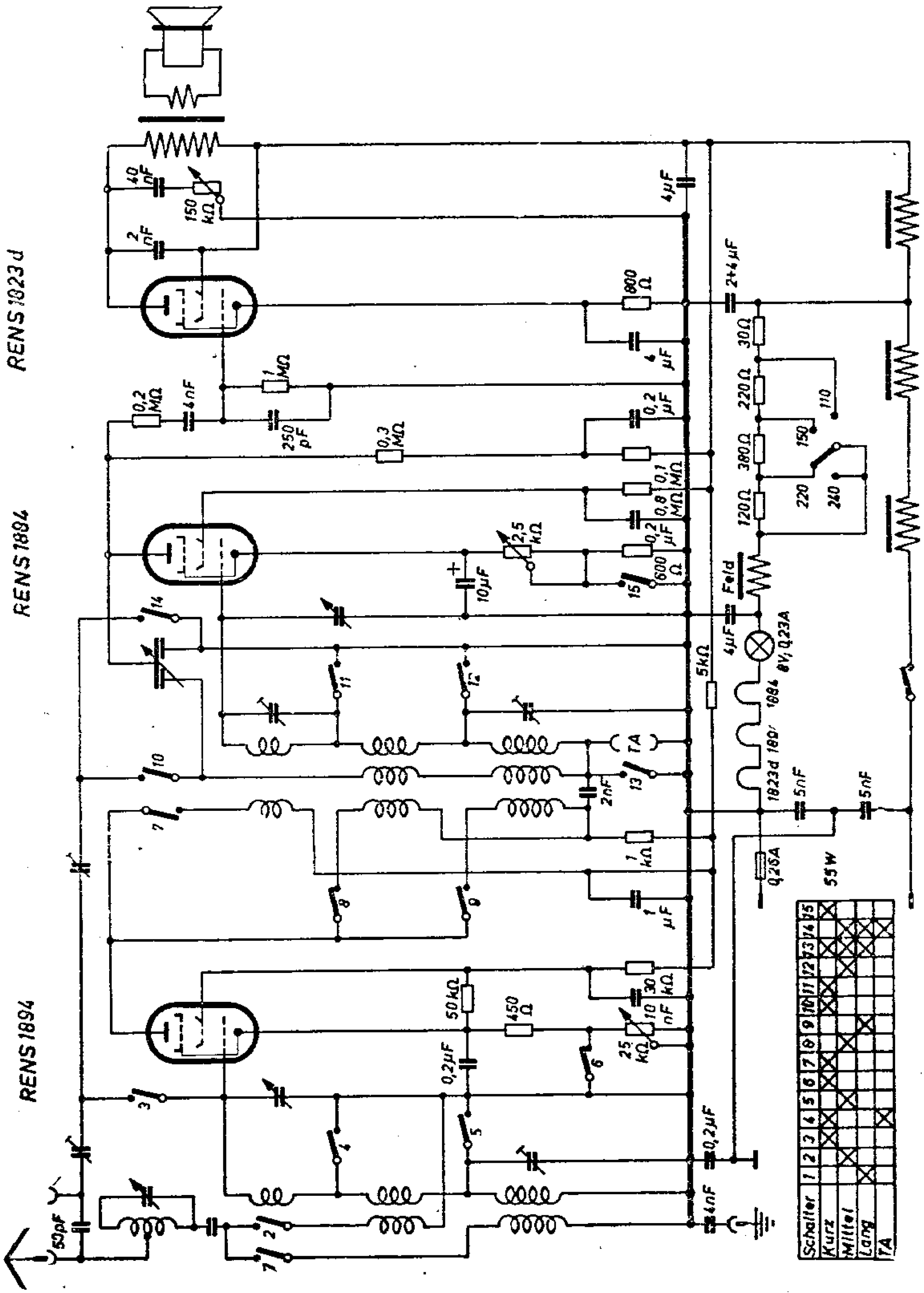
RENS 1823 d
RENS 1894
RENS 1894
RENS 1894
40 nF
150 kΩ
2 nF
0,2 MΩ
4 nF
1 MΩ
250 pF
0,3 MΩ
800 Ω
4 µF
0,2 µF
0,1 MΩ
0,8 MΩ
0,2 µF
600 Ω
2,5 kΩ
10 µF
4 µF
2+4 µF
30 Ω
220 Ω
380 Ω
120 Ω
110
150
220
240
Feld
4 µF
5 kΩ
1823d 1894
5 nF
5 nF
Q 25A
55 W
TA
2 nF
1 kΩ
1 µF
30 kΩ
10 nF
25 kΩ
50 kΩ
450 Ω
0,2 µF
0,2 µF
4 nF
50 pF
Schalter 1 2 3 4 5 6 7 8 9 10 11 12 13 14 15
Kurz
Mittel
Lang
TA

# Owin L 62 W Weltklang

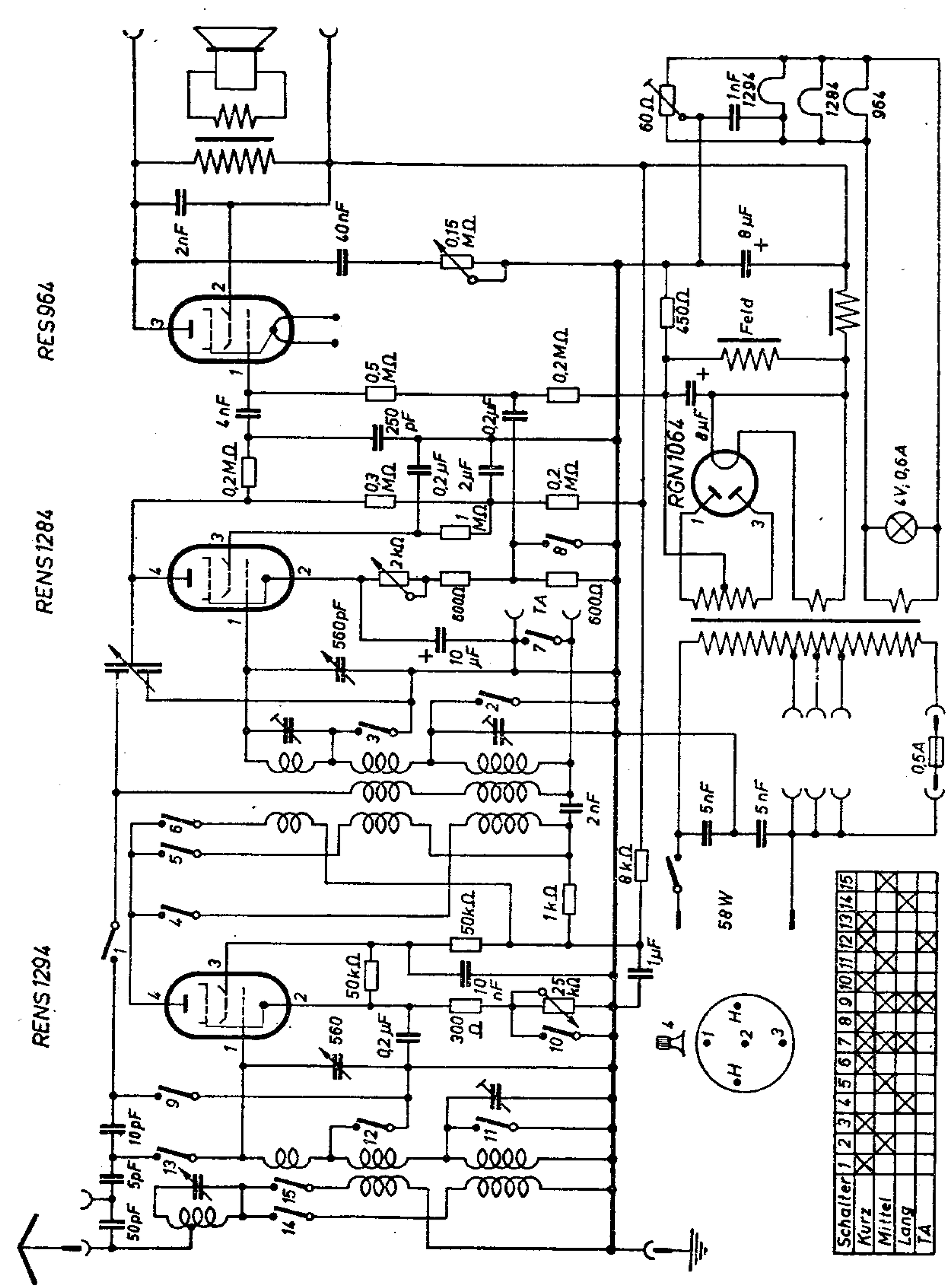

# Owin L 63 W Weltenbummler

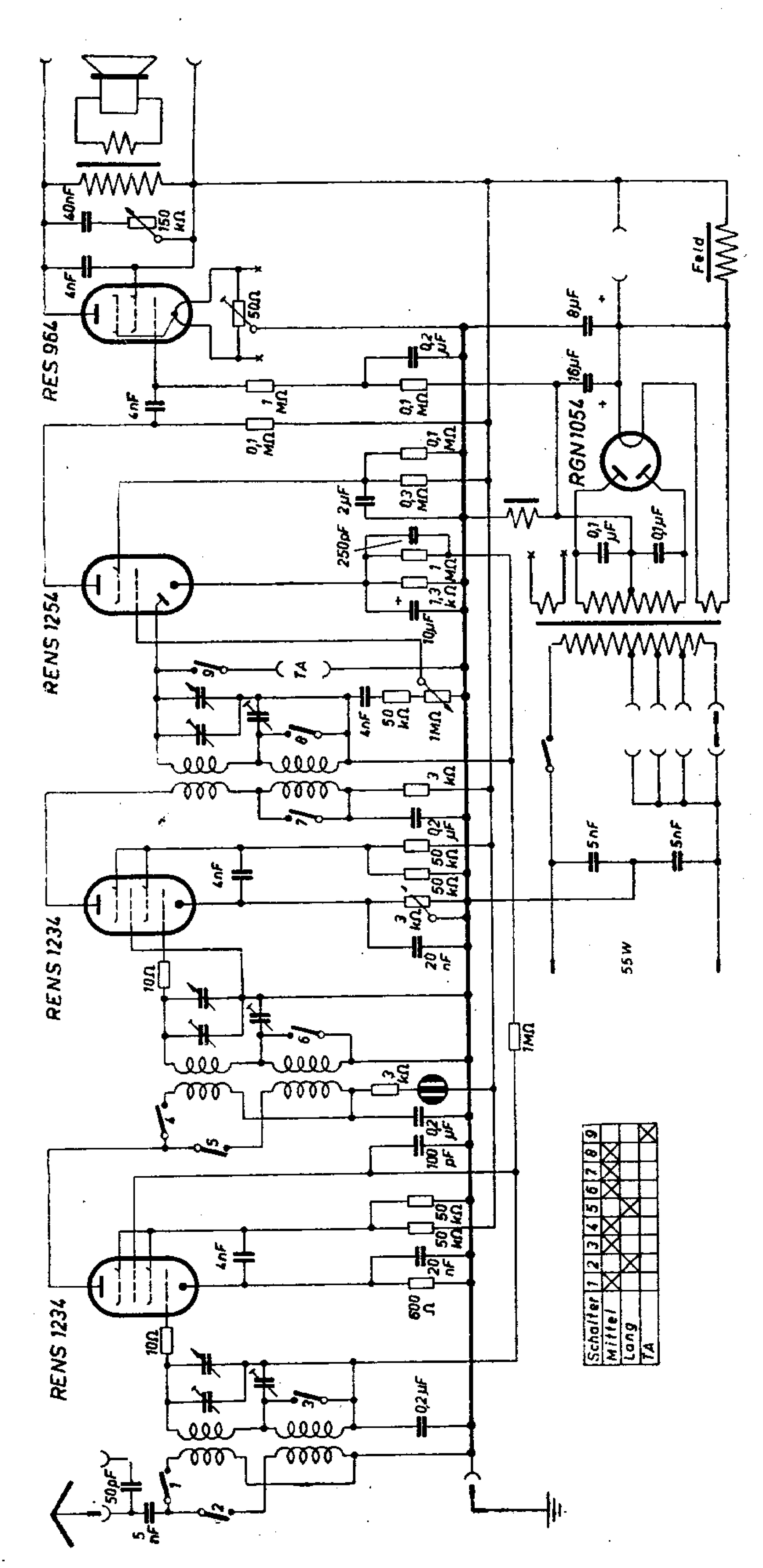

# Owin L 71 G Spezial

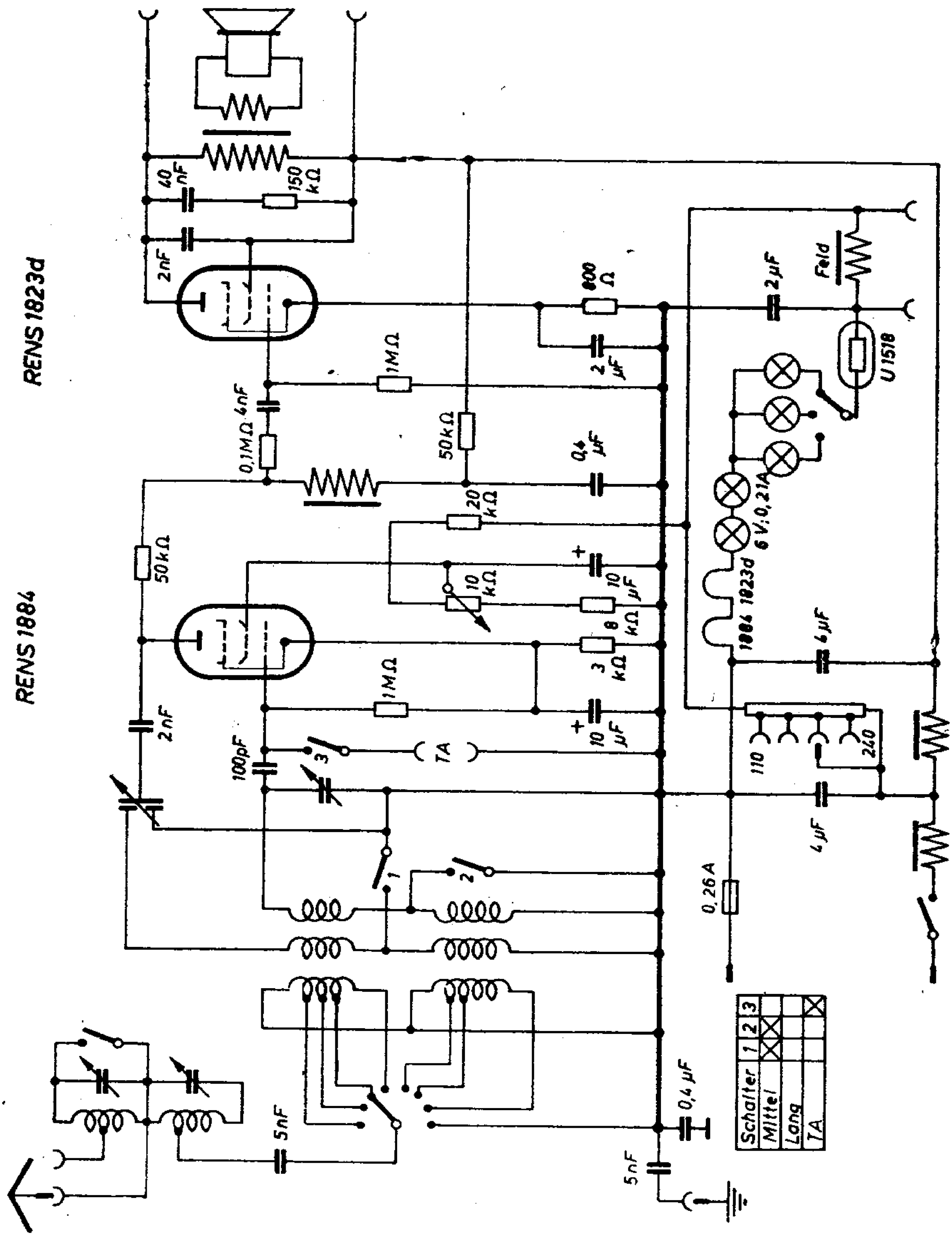

# Owin - Passat L71G

**2 Röhren**
**1 Kreis**
**G-Rü-G**

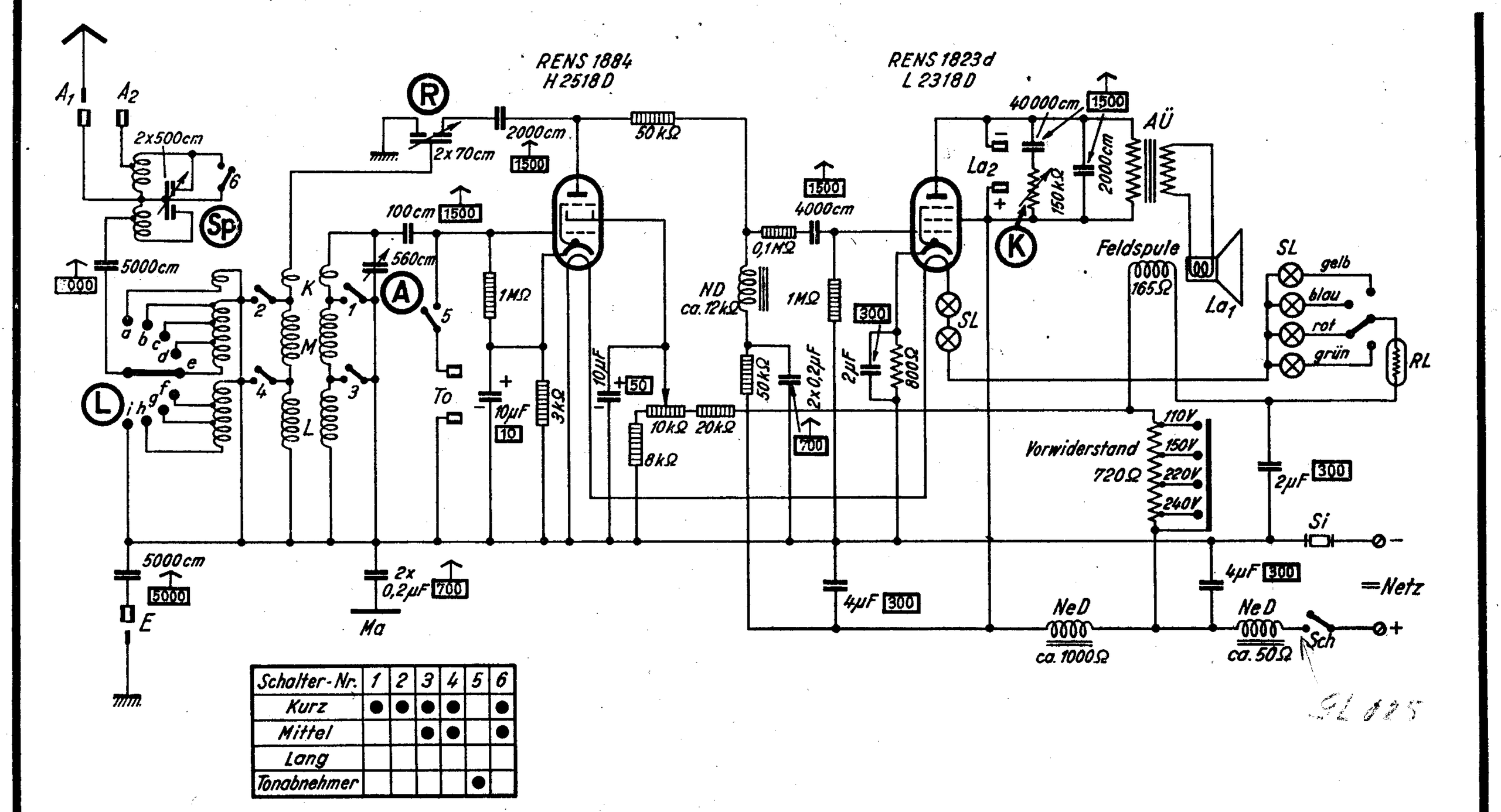


| Schalter-Nr. | 1 | 2 | 3 | 4 | 5 | 6 |
|---|---|---|---|---|---|---|
| Kurz | ● | ● | ● | ● | | ● |
| Mittel | | | ● | ● | | ● |
| Lang | | | | | | |
| Tonabnehmer | | | | | ● | |

# Owin L 71 W Spezial

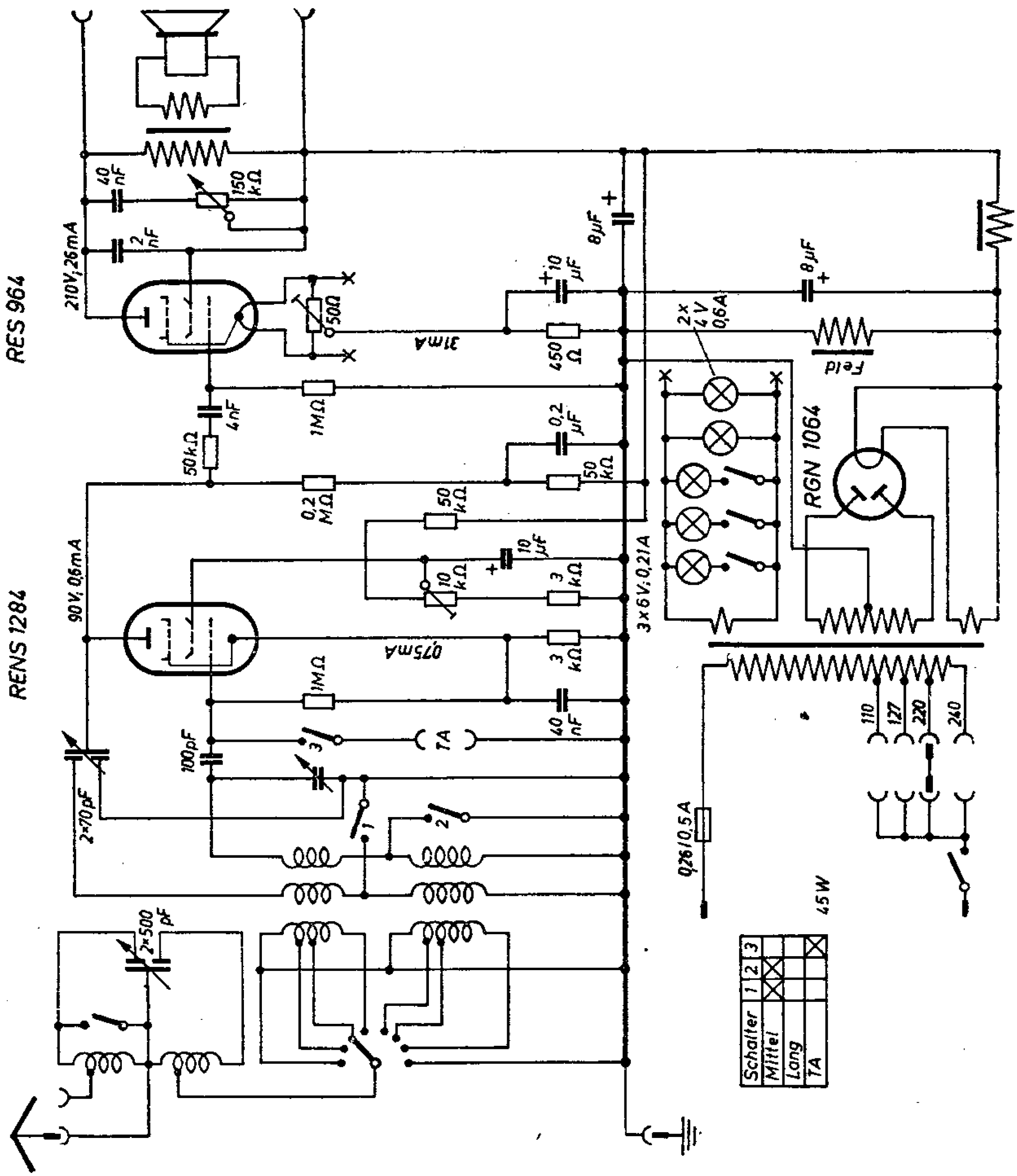

# Owin L 71 W „Passat"

**2 Röhren**
**1 Kreis**
**G-Rü-W**

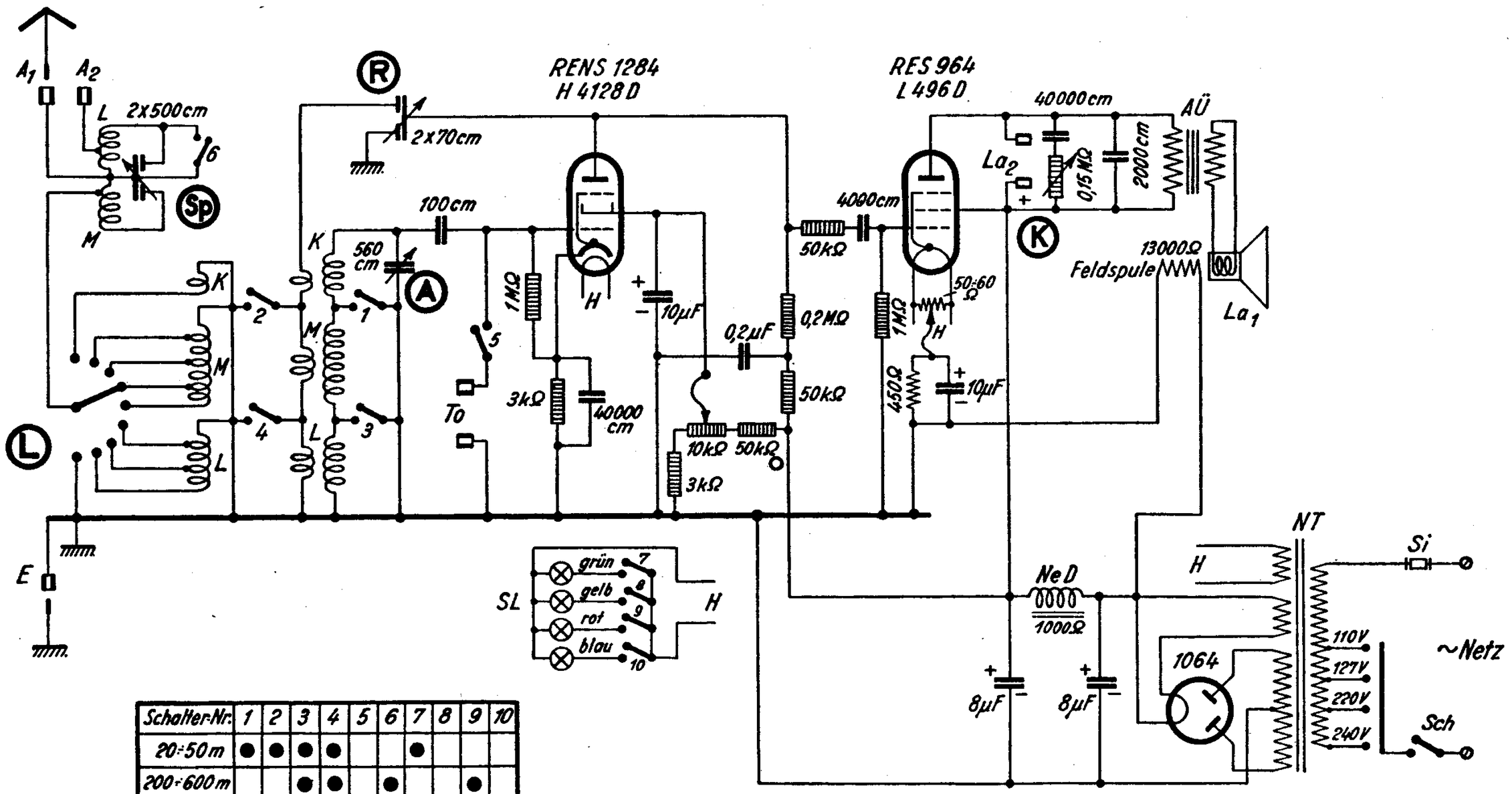


| Schalter-Nr: | 1 | 2 | 3 | 4 | 5 | 6 | 7 | 8 | 9 | 10 |
|---|---|---|---|---|---|---|---|---|---|---|
| 20÷50m | ● | ● | ● | ● | | | ● | | | |
| 200÷600m | | | ● | ● | | ● | | | ● | |
| 1000÷2000m | | | | | | | | | | ● |
| To | | | | | ● | | | ● | | |

# Owin L 72 G Weltklang

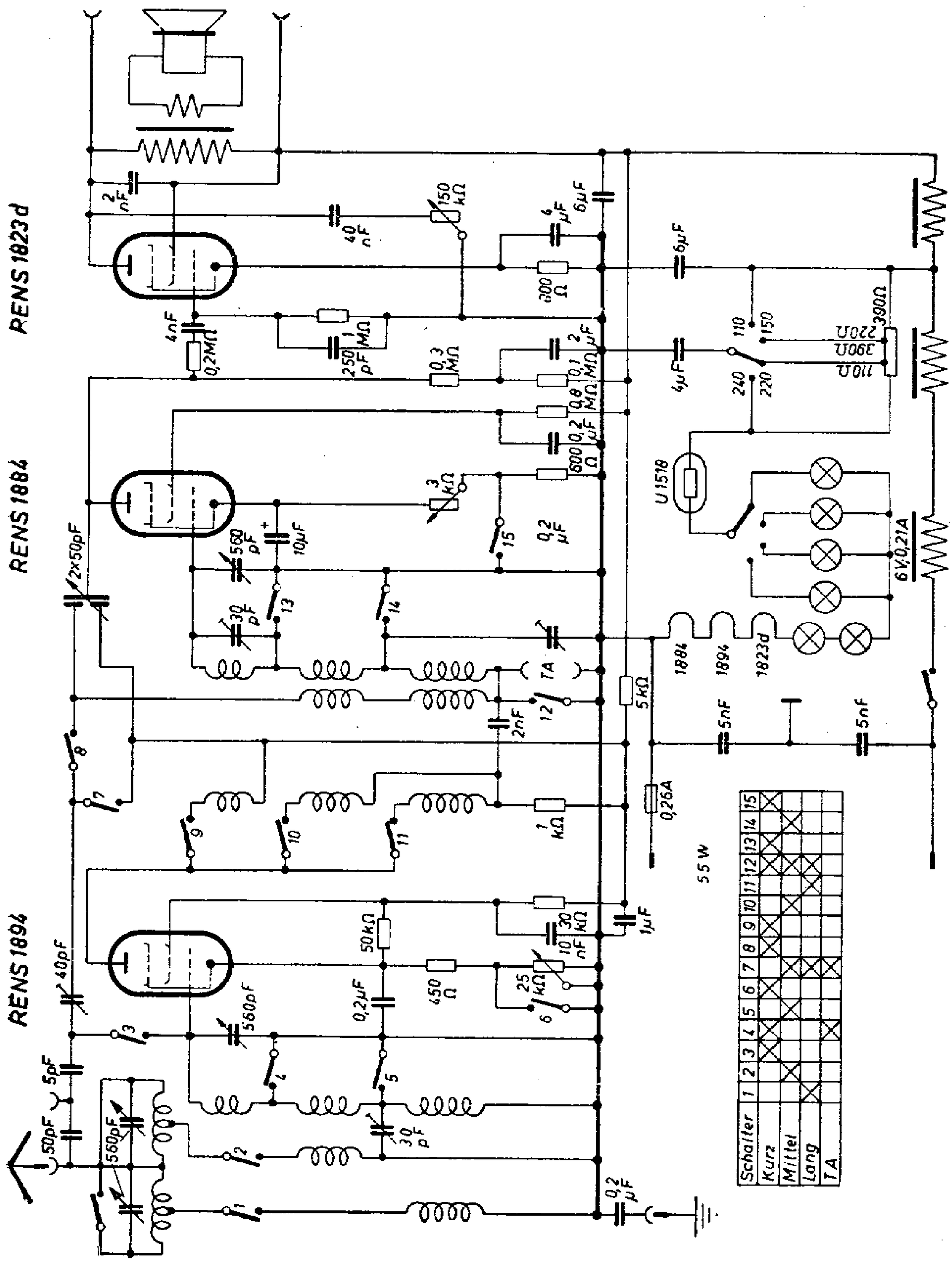

# Owin L 72 G Weltklang (ab Gerät Nr. 30200)

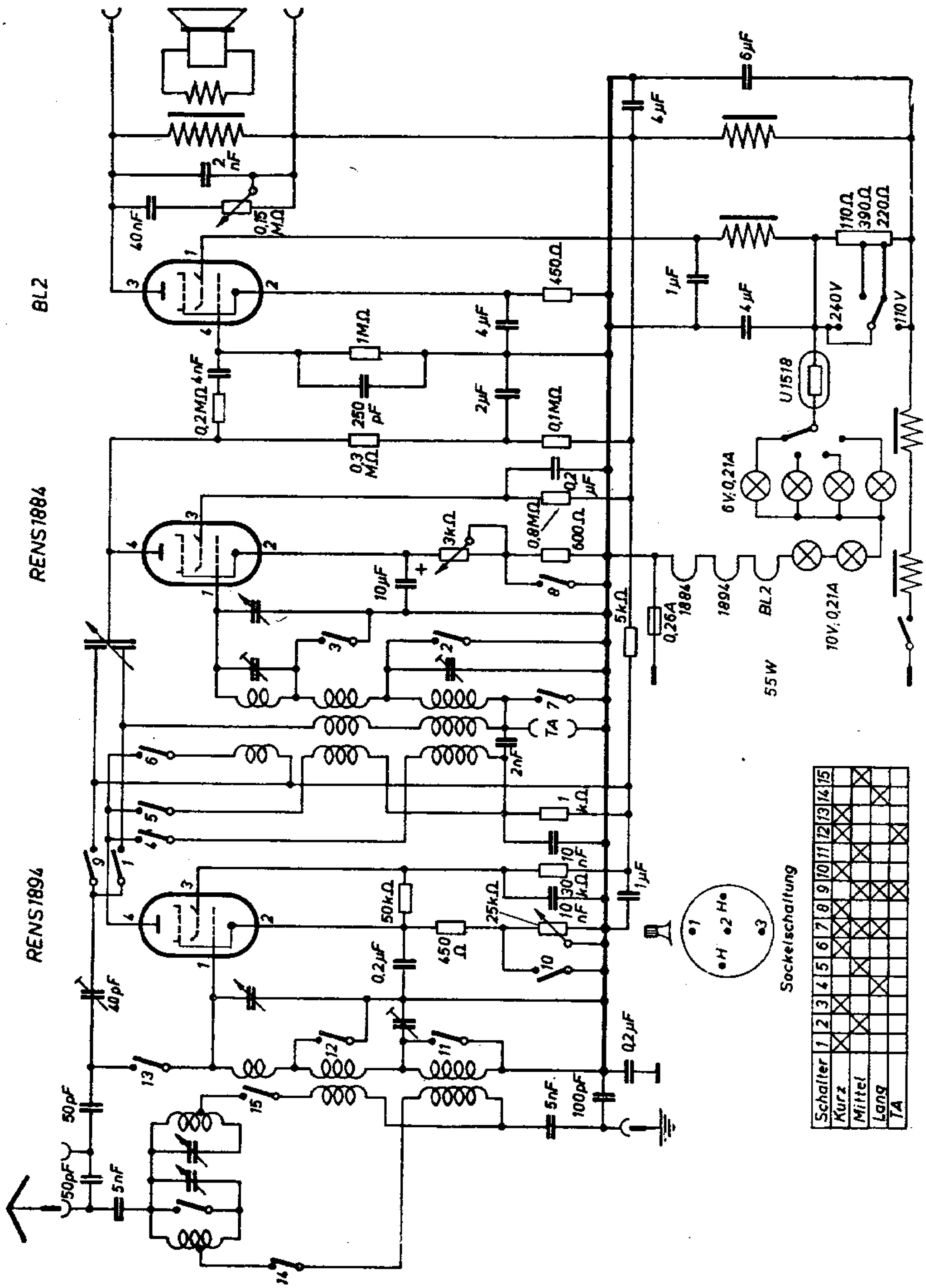

# Owin L 72 G Spezial (110 V)

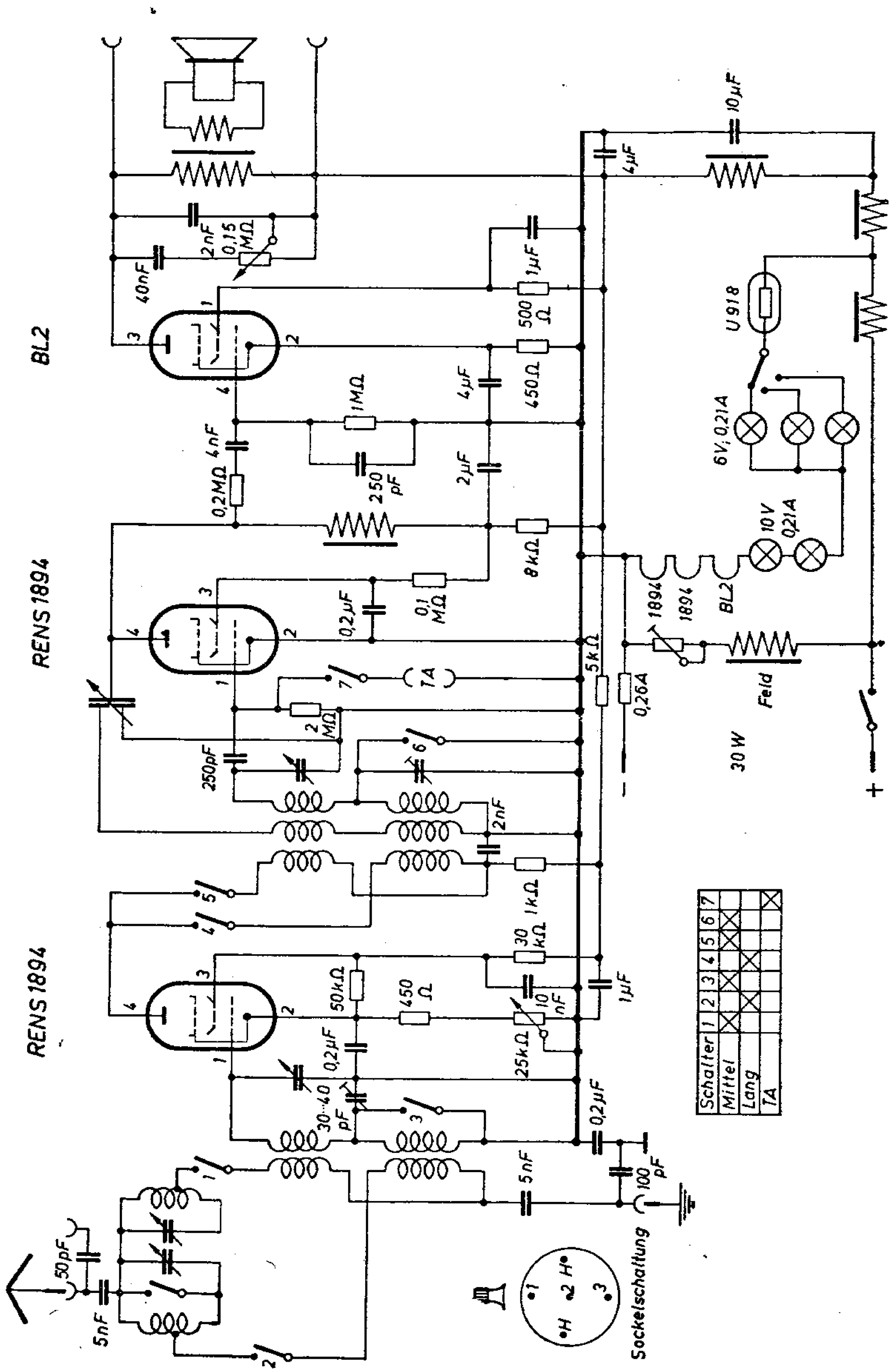

# Owin L 72 G Spezial (150/240 V)

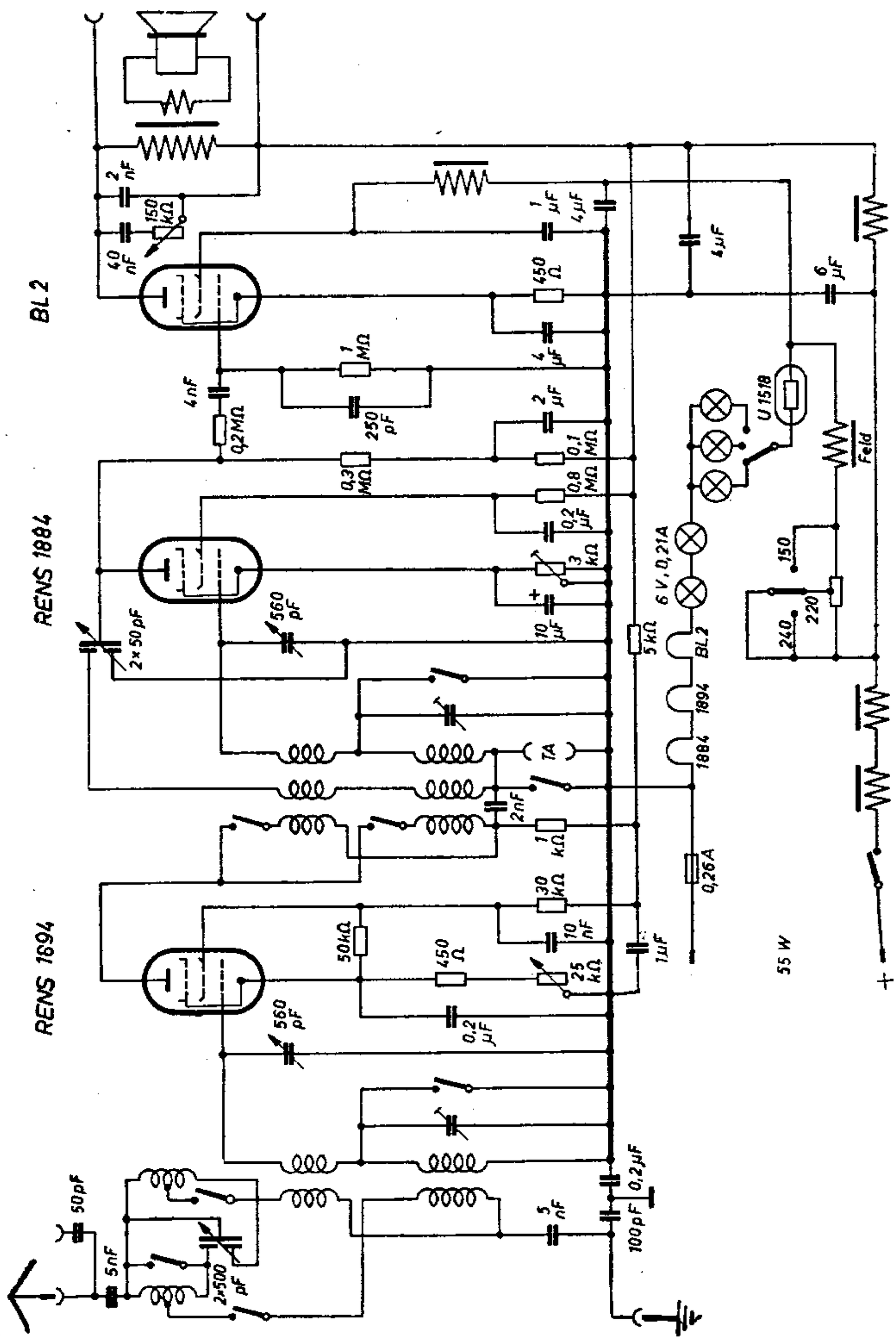

# Owin L 72 W Spezial

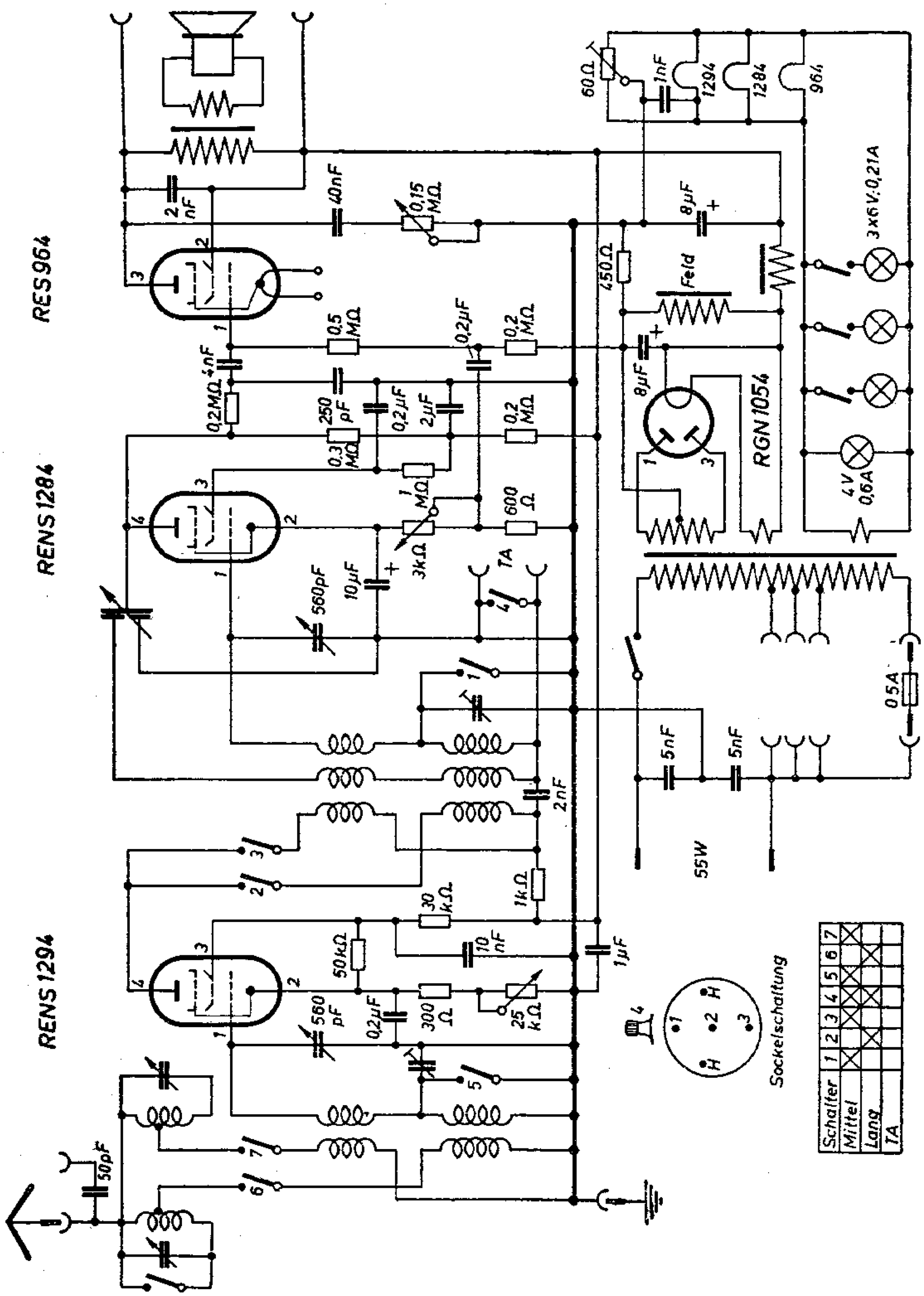

SCHALTPLAN SAMMLUNG
OTTO MÜLLER & Co., K-G RHEINE i. WESTFALEN



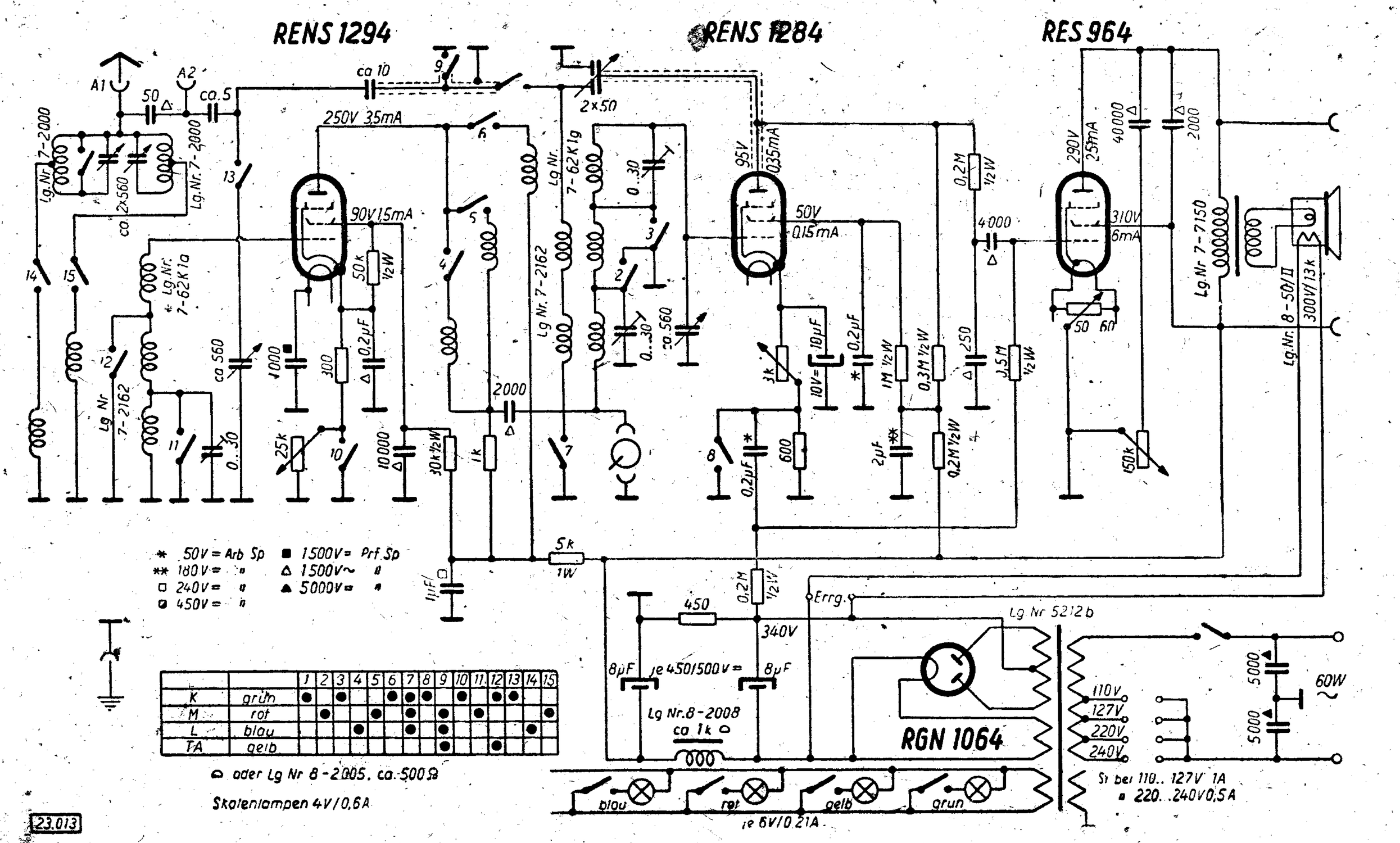


| | | 1 | 2 | 3 | 4 | 5 | 6 | 7 | 8 | 9 | 10 | 11 | 12 | 13 | 14 | 15 |
|---|---|---|---|---|---|---|---|---|---|---|---|---|---|---|---|---|
| K | grün | ● | | ● | | | ● | ● | ● | | ● | | ● | ● | | |
| M | rot | | ● | | | ● | | ● | | ● | | ● | | | | ● |
| L | blau | | | | ● | | | ● | | ● | | | | | ● | |
| TA | gelb | | | | | | | | | ● | | | ● | | | |

SCHALTPLAN SAMMLUNG
OTTO MÜLLER & Co., K.-G. RHEINE i. WESTFALEN



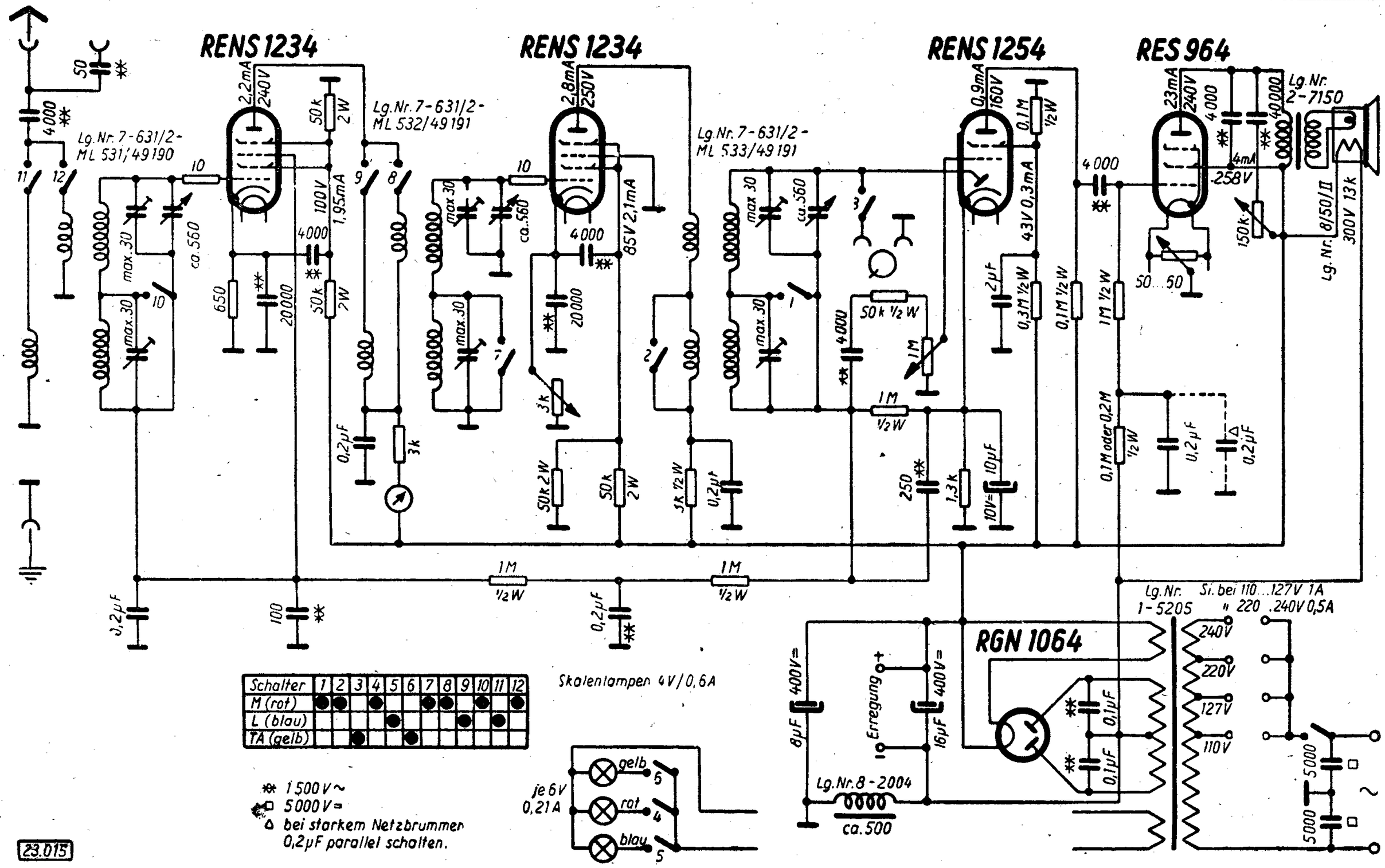


| Schalter | 1 | 2 | 3 | 4 | 5 | 6 | 7 | 8 | 9 | 10 | 11 | 12 |
|---|---|---|---|---|---|---|---|---|---|---|---|---|
| M (rot) | ● | ● | | ● | | | ● | ● | | ● | | ● |
| L (blau) | | | | | ● | | | | ● | | ● | |
| TA (gelb) | | | ● | | | ● | | | | | | |

23.015

# Owin L 91 B Oekonom junior

**4 Röhren**
**1 Kreis**
**G-Rü-B**

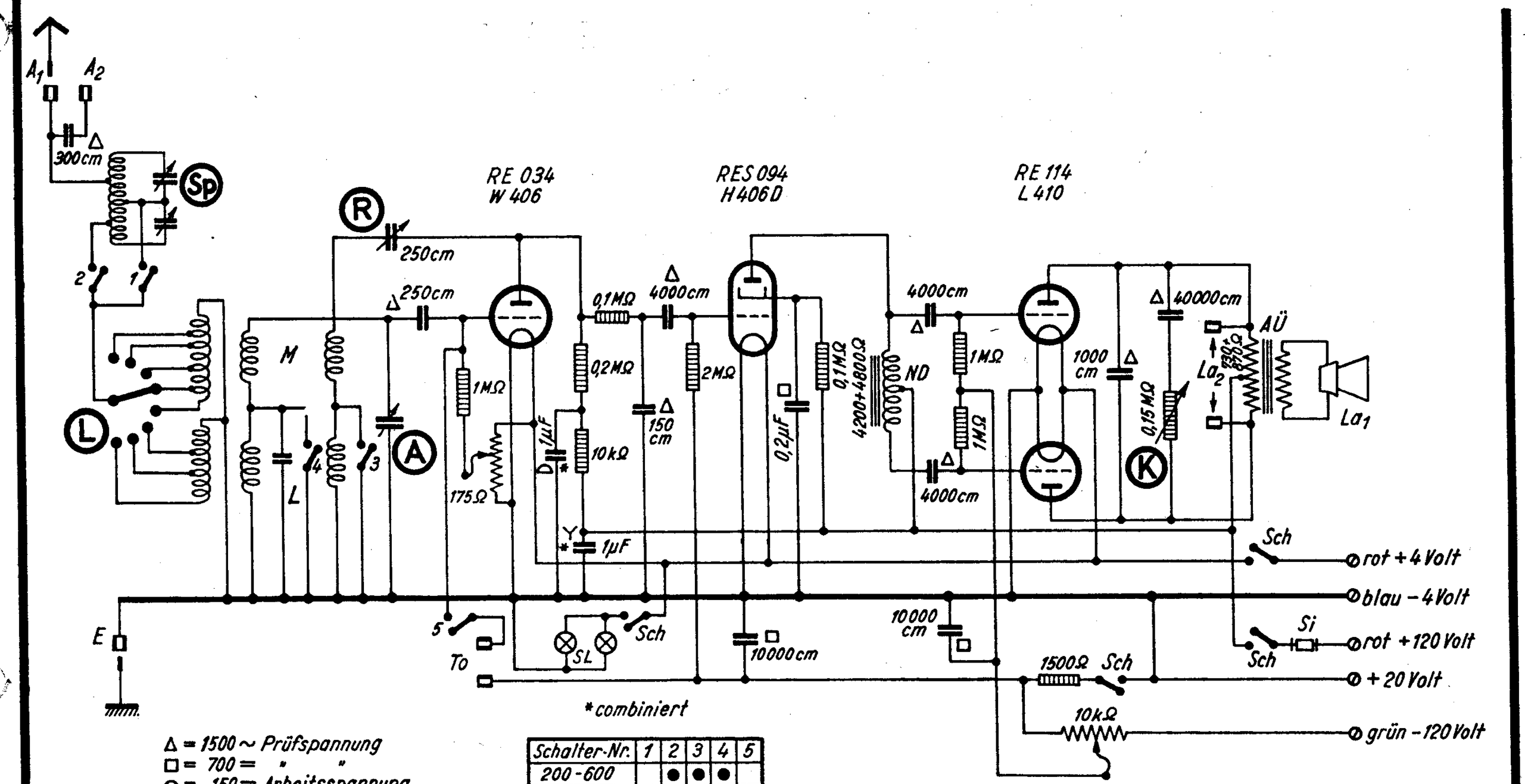


Δ = 1500 ~ Prüfspannung
□ = 700 = " "
⌓ = 150 = Arbeitsspannung
Y = 350 = " "

| Schalter-Nr. | 1 | 2 | 3 | 4 | 5 |
|---|---|---|---|---|---|
| 200-600 | | ● | ● | ● | |
| 1000-2000 | ● | | | | |
| To | | | | | ● |

SCHALTPLAN SAMMLUNG
OTTO MÜLLER & Co., K.G. RHEINE i. WESTFALEN



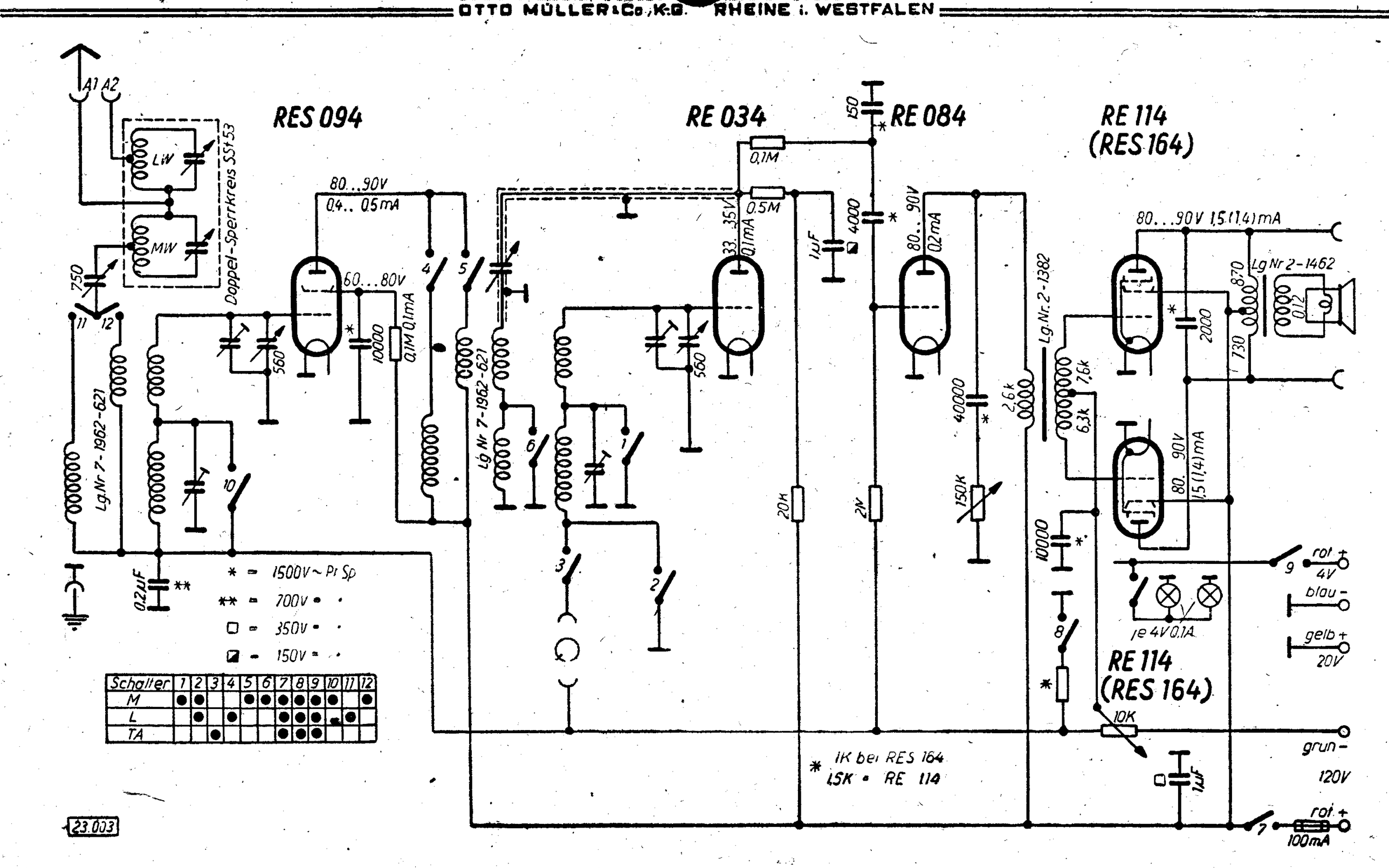


| Schalter | 1 | 2 | 3 | 4 | 5 | 6 | 7 | 8 | 9 | 10 | 11 | 12 |
|---|---|---|---|---|---|---|---|---|---|---|---|---|
| M | ● | ● | | | ● | ● | ● | ● | ● | ● | | ● |
| L | | ● | | ● | | | ● | ● | ● | ● | ● | |
| TA | | | ● | | | | ● | ● | ● | | | |

# Owin L92 B „Oekonom 35" und L92 B2 „Oekonom-Luxus"

**5 Röhren**
**2 Kreise**
**G–Rü–B**

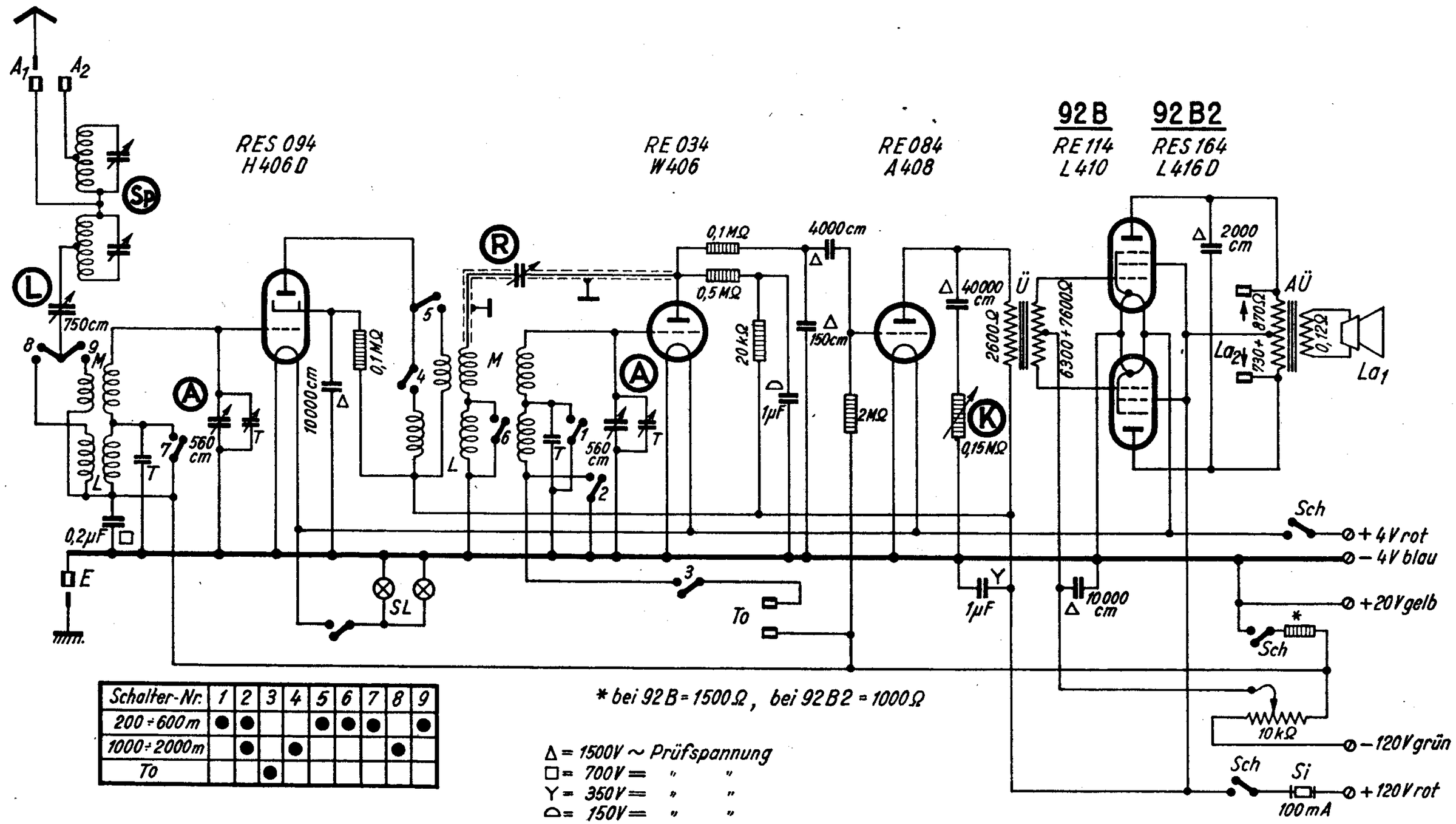


| Schalter-Nr. | 1 | 2 | 3 | 4 | 5 | 6 | 7 | 8 | 9 |
|---|---|---|---|---|---|---|---|---|---|
| 200÷600m | ● | ● | | | ● | ● | ● | | ● |
| 1000÷2000m | | ● | | ● | | | | ● | |
| To | | | ● | | | | | | |

* bei 92B = 1500Ω, bei 92B2 = 1000Ω

Δ = 1500V ~ Prüfspannung
□ = 700V = " "
Y = 350V = " "
⌓ = 150V = " "

# Owin L 92 G Jubilar

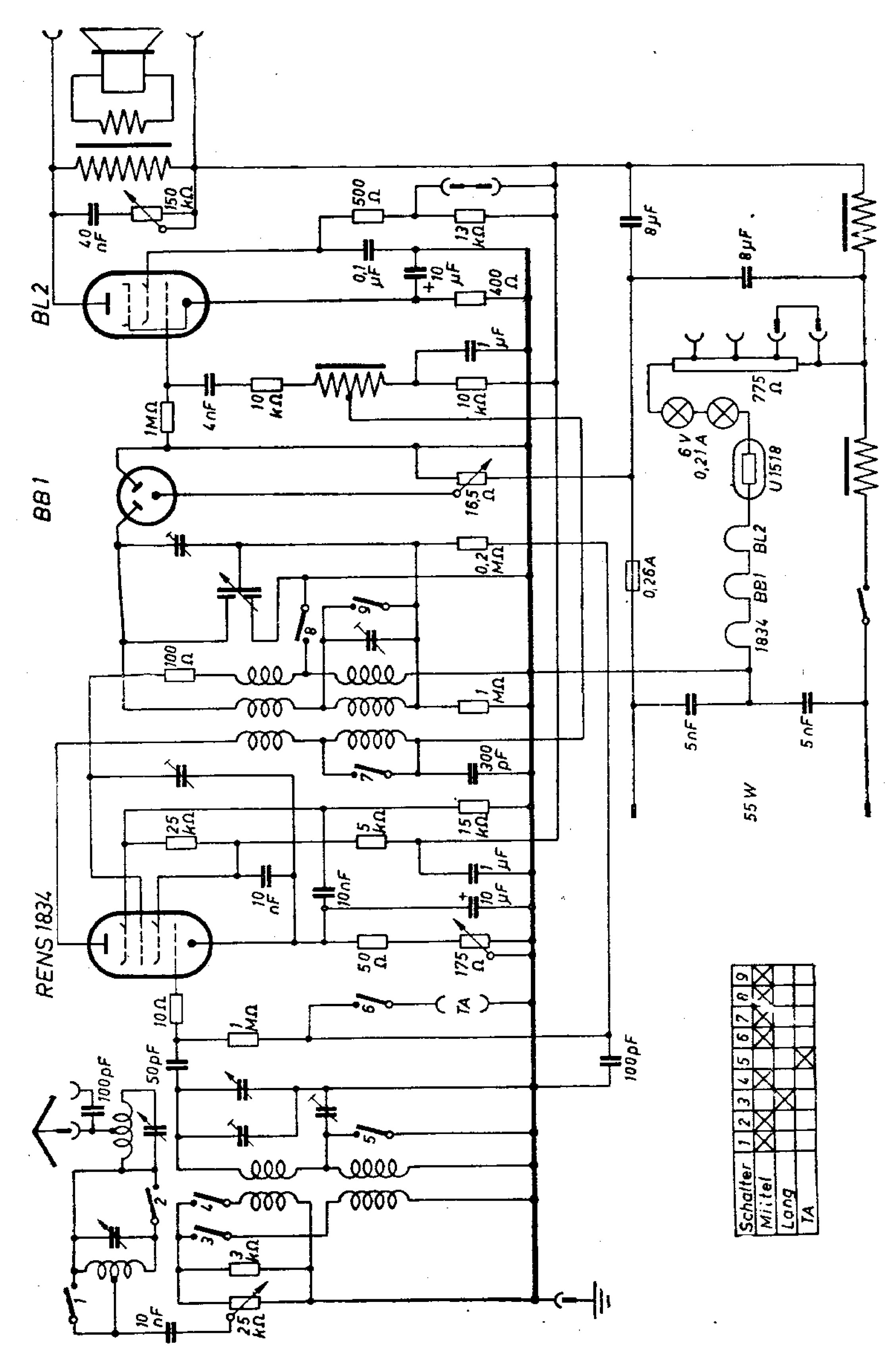

SCHALTPLAN SAMMLUNG
OTTO MÜLLER & Co. K.G. RHEINE i. WESTFALEN



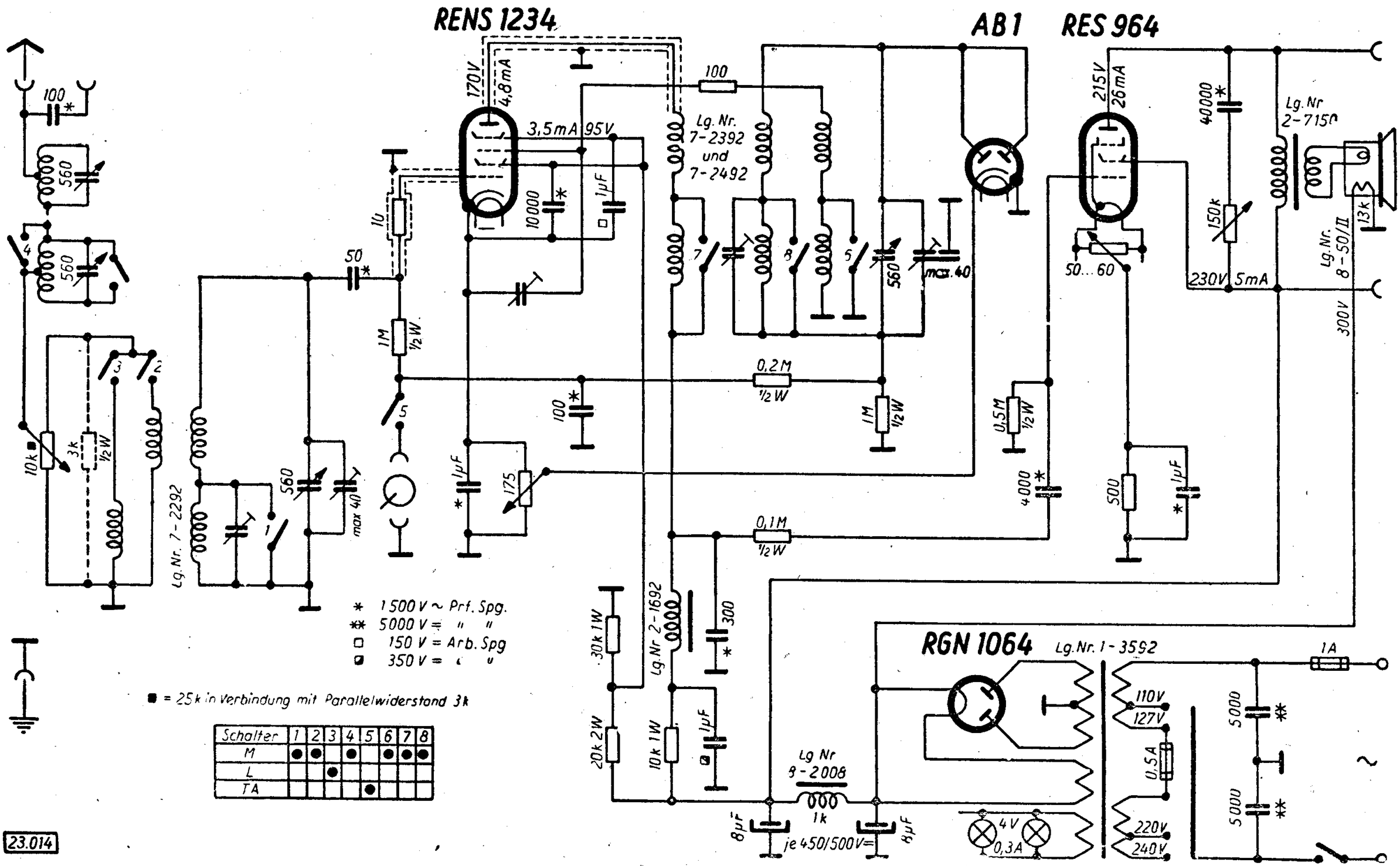


| Schalter | 1 | 2 | 3 | 4 | 5 | 6 | 7 | 8 |
|---|---|---|---|---|---|---|---|---|
| M | ● | ● | | ● | | ● | ● | ● |
| L | | | ● | | | | | |
| TA | | | | | ● | | | |

# Owin – Meisterstück L96 W

**5 Röhren**
**7 Kreise**
**S – W**

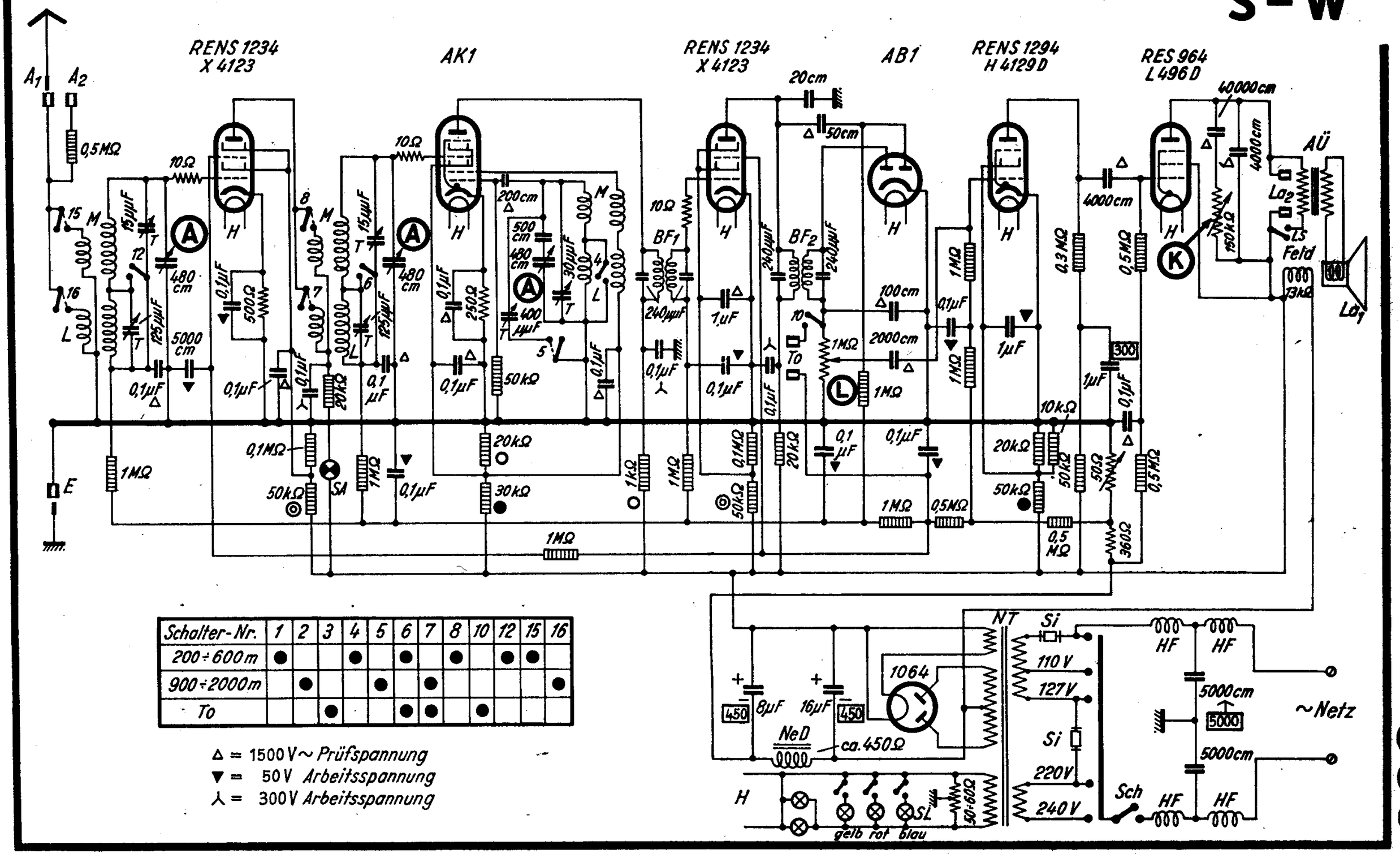


| Schalter-Nr. | 1 | 2 | 3 | 4 | 5 | 6 | 7 | 8 | 10 | 12 | 15 | 16 |
|---|---|---|---|---|---|---|---|---|---|---|---|---|
| 200÷600 m | ● | | | ● | | ● | | ● | | ● | ● | |
| 900÷2000 m | | ● | | | ● | | ● | | | | | ● |
| To | | | ● | | | ● | ● | | ● | | | |

△ = 1500 V~ *Prüfspannung*
▼ = 50 V *Arbeitsspannung*
人 = 300 V *Arbeitsspannung*

# R 52 W

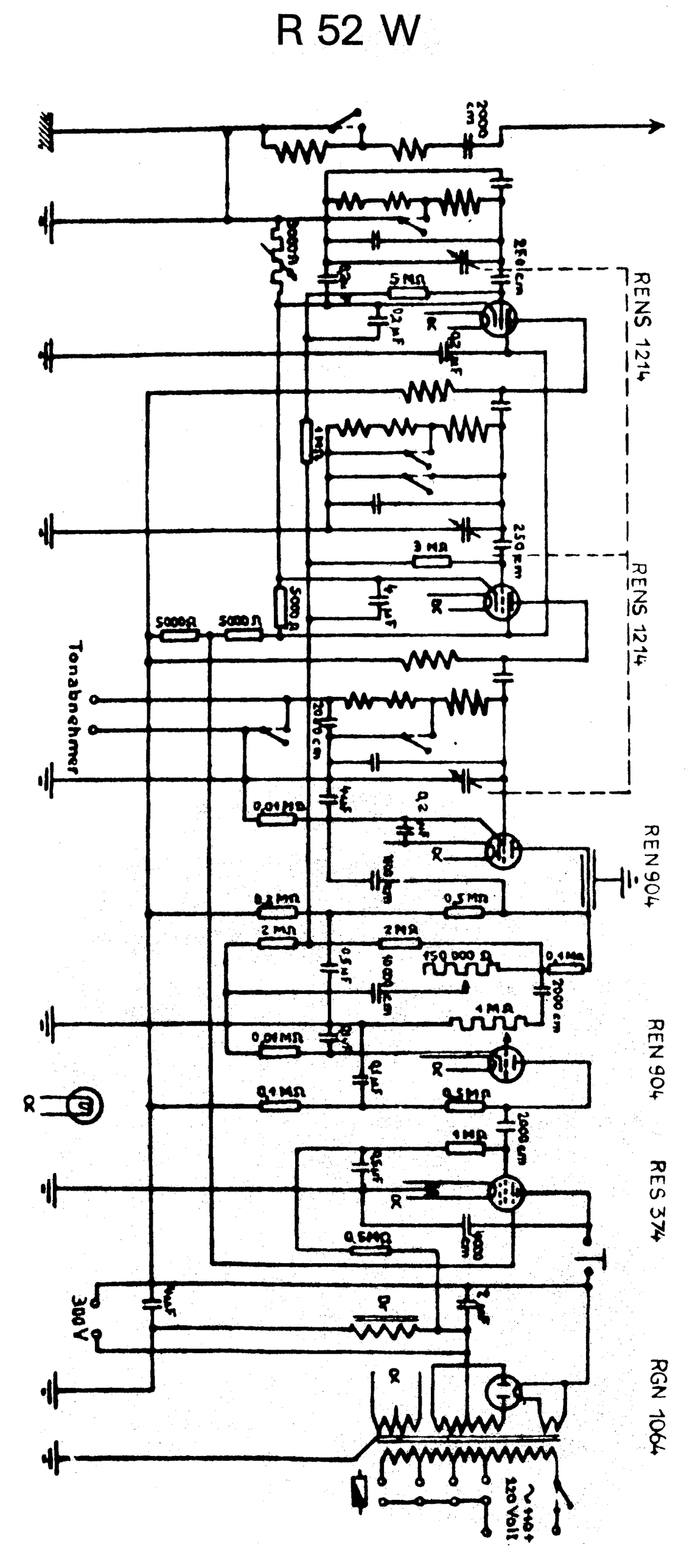
REN 904
REN 904
RES 374
RGN 1064
REN 1214
REN 1214
Tonabnehmer
380 V
~ 110 - 220 Volt