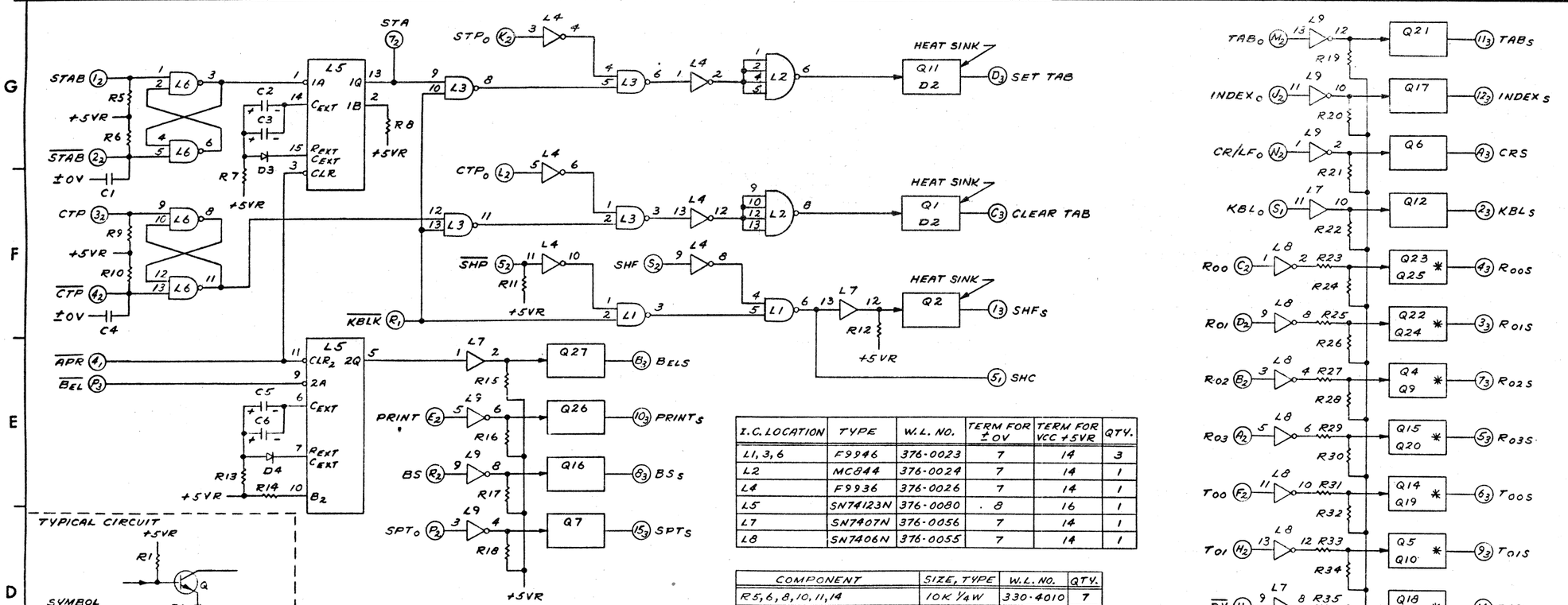

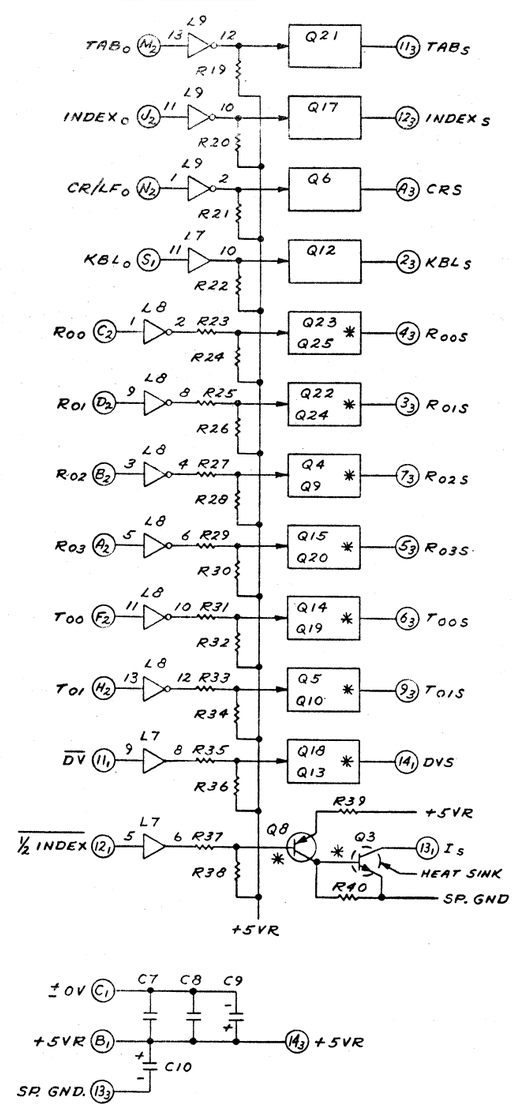

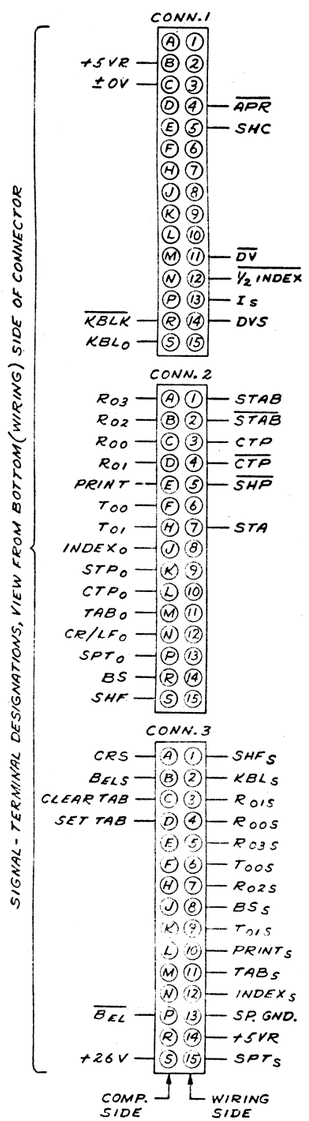

I.C. LOCATION	TYPE	W.L. NO.	TERM FOR ±0V	TERM FOR VCC +5VR	QTY.
L1, 3, 6	F9946	376-0023	7	14	3
L2	MC844	376-0024	7	14	1
L4	F9936	376-0026	7	14	1
L5	SN74123N	376-0080	8	16	1
L7	SN7407N	376-0056	7	14	1
L8	SN7406N	376-0055	7	14	1

COMPONENT	SIZE, TYPE	W.L. NO.	QTY.
R5, 6, 8, 10, 11, 14	10K ¼W	330-4010	7
R7	18K 5% ¼W	330-4019	1
R12, 22	470Ω ¼W	330-2047	2
R13	27K 5% ¼W	330-4028	1
R15, 17, 18, 19, 20, 21	390Ω ¼W	330-2039	6
R16	560Ω ¼W	330-2056	1
R23, 25, 27, 29, 31, 33, 35	150Ω ¼W	330-2015	7
R24, 26, 28, 30, 32, 34, 36, 38	4.7K ¼W	330-3047	8
R37	100Ω ¼W	330-2010	1
R39	39Ω ¼W	330-1039	1
R40	220Ω ¼W	330-2022	1
C1, 4	220μf CER	300-1220	2
C2, 5	2.2μf 20V TA.	300-4023	2
C3	33μf 10V TA.	300-4024	1
C6	5.6μf 35V TA.	300-4025	1
C7, 8	.05μf 12V	300-1900	2
C9, 10	15μf 20V TA.	300-4022	2
D3, 4	DIODE, SIL.	380-1001	2

COMP.	SIZE, TYPE	W.L. NO.	QTY.
R1	68Ω ¼W	331-1068	2
D1	EM403	380-4000	2
Q	2N3725	375-1027	2

COMP.	SIZE, TYPE	W.L. NO.	QTY.
R2	2.2K ¼W	330-2022	9
D2	SIL. DIODE	380-1001	9
Q	2N3725	375-1027	9

COMP.	SIZE, TYPE	W.L. NO.	QTY.
R3	56Ω ¼W	330-1056	7
R4	220Ω ¼W	330-2022	7
Q	SIL. GT544	375-1011	7
QQ	2N6103 NPN	375-1035	16

COMPONENT LAYOUT 6371

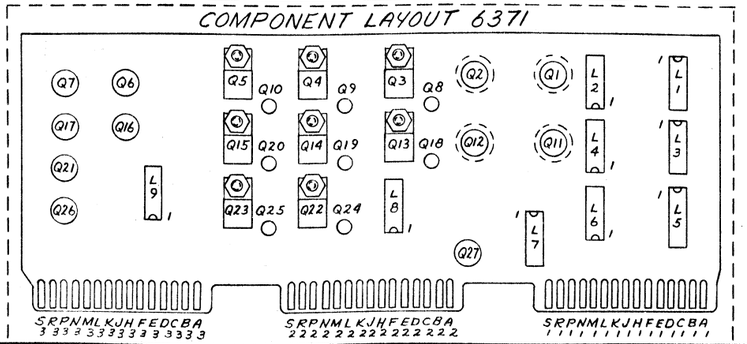

WANG LABORATORIES INC. TEWKSBURY, MASS.				
MODEL NO. 1200	DRAWN R.S.S. 6-31-73	APP.	7/4/73	
	CHECKED	APP.		
TITLE SCHEMATIC LOGIBLOC #6371 TELETYPEWRITER OUTPUT DRIVER				
SHT 1 OF 1	DWG. NO. D 6371-1		REV.	

D 6371-1

DATE | REV | REVISION