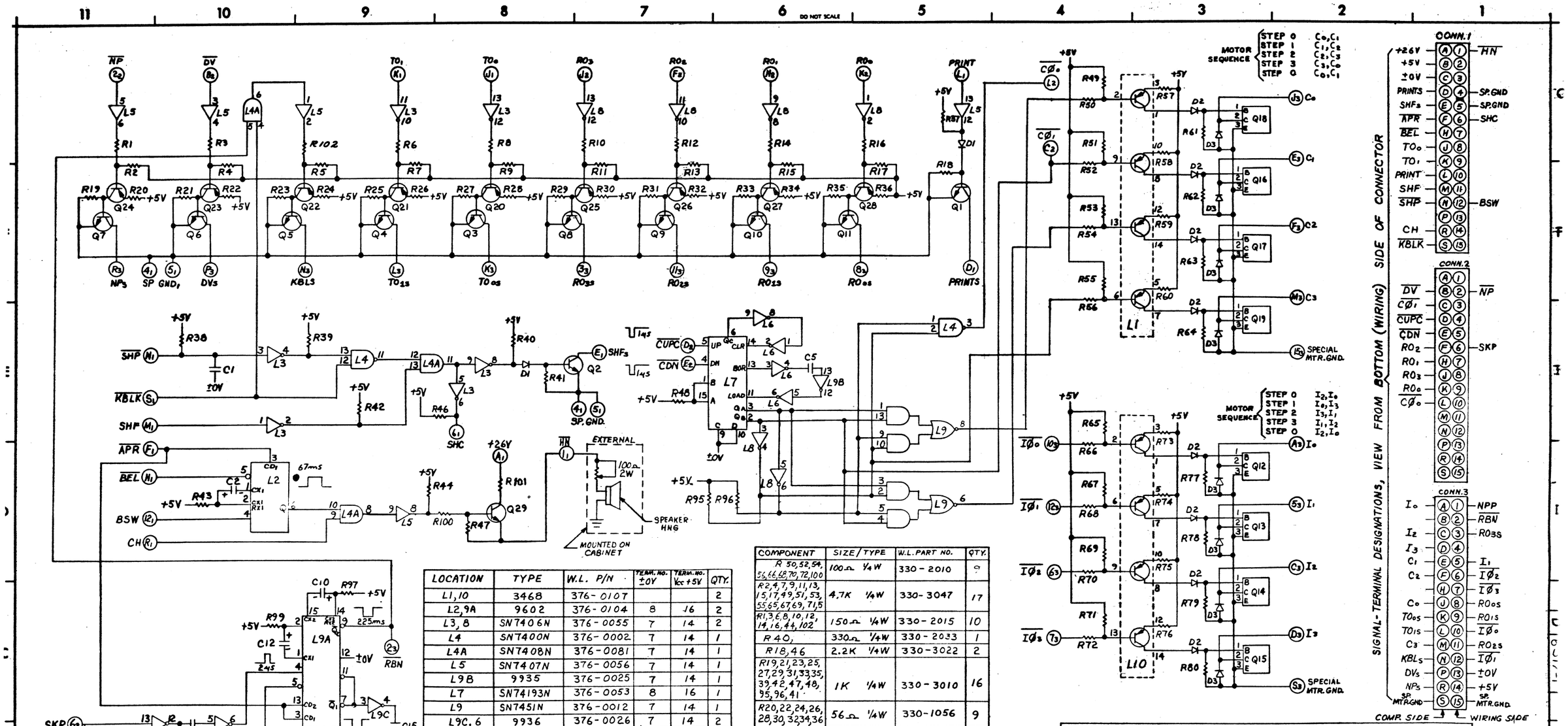

LOCATION	TYPE	W.L. P/N	TERM. NO. ±0V	TERM. NO. Vcc +5V	QTY.
L1,10	3468	376-0107			2
L2,9A	9602	376-0104	8	16	2
L3,8	SN7406N	376-0055	7	14	2
L4	SN7400N	376-0002	7	14	1
L4A	SN7408N	376-0081	7	14	1
L5	SN7407N	376-0056	7	14	1
L9B	9935	376-0025	7	14	1
L7	SN74193N	376-0053	8	16	1
L9	SN7451N	376-0012	7	14	1
L9C,6	9936	376-0026	7	14	2

COMPONENT	SIZE/TYPE	W.L. P/N	QTY.
Q1,2	2N3725	375-1027	2
Q3-15,29	2N6103	375-1035	14
Q20-28	GT544	375-1017	9
Q16-19	2N6099	375-1042	4
HEATSINK (Q2)	BIRTCHTER	375-9010	1
TRANSIPAD	LARGE	375-9001	2
TRANSIPAD	SMALL	375-9004	9
SCREW	6-32x5/8 NYLON	650-3205	2
NUT	6-32 NYLON	652-3002	2

COMPONENT	SIZE/TYPE	W.L. PART NO.	QTY.
R 50,52,54,56,66,68,70,72,100	100Ω 1/4W	330-2010	9
R2,4,7,9,11,13,15,17,49,51,53,55,65,67,69,71,5	4.7K 1/4W	330-3047	17
R1,3,6,8,10,12,14,16,44,102	150Ω 1/4W	330-2015	10
R40,	330Ω 1/4W	330-2033	1
R18,46	2.2K 1/4W	330-3022	2
R19,21,23,25,27,29,31,33,35,39,42,47,48,95,96,41	1K 1/4W	330-3010	16
R20,22,24,26,28,30,3234,36	56Ω 1/4W	330-1056	9
R37	390Ω 1/4W	330-2039	1
R38	10K 1/4W	330-4010	1
R43	39K 1/4W	330-4039	1
R57-60,73-76	27Ω 1/2W	331-1027	8
R61-64,77-80,	220Ω 1/4W	330-2022	8
R101	100Ω 1W	332-2010	1
R97	22K 5% 1/4W	330-4023	1
C10	33μf 35V TANT	300-4029	1
C1,6,7	.05μf 12V	300-1900	3
C2	5.6μf 35V TANT	300-4017	1
C13,14,15	560pf CER	300-1560	3
C5	220pf CER	300-1220	1
C12	10μf 35V TANT	300-4032	1
D1	D035 SIL. 30V	380-1001	2
D2	D035 SIL. 40V	380-1004	8
D3	EM1403	380-4000	8
R99	27K 1/4W	330-4027	1
C8,9	15μf 20V TANT.	300-4022	2