THIS DOCUMENT IS THE PROPERTY OF WANG LABORATORIES, INC. AND SHALL NOT BE REPRODUCED OR COPIED, OR USED AS A BASIS FOR THE MANUFACTURE OR SALE OF APPARATUS OR DEVICES WITHOUT PERMISSION.

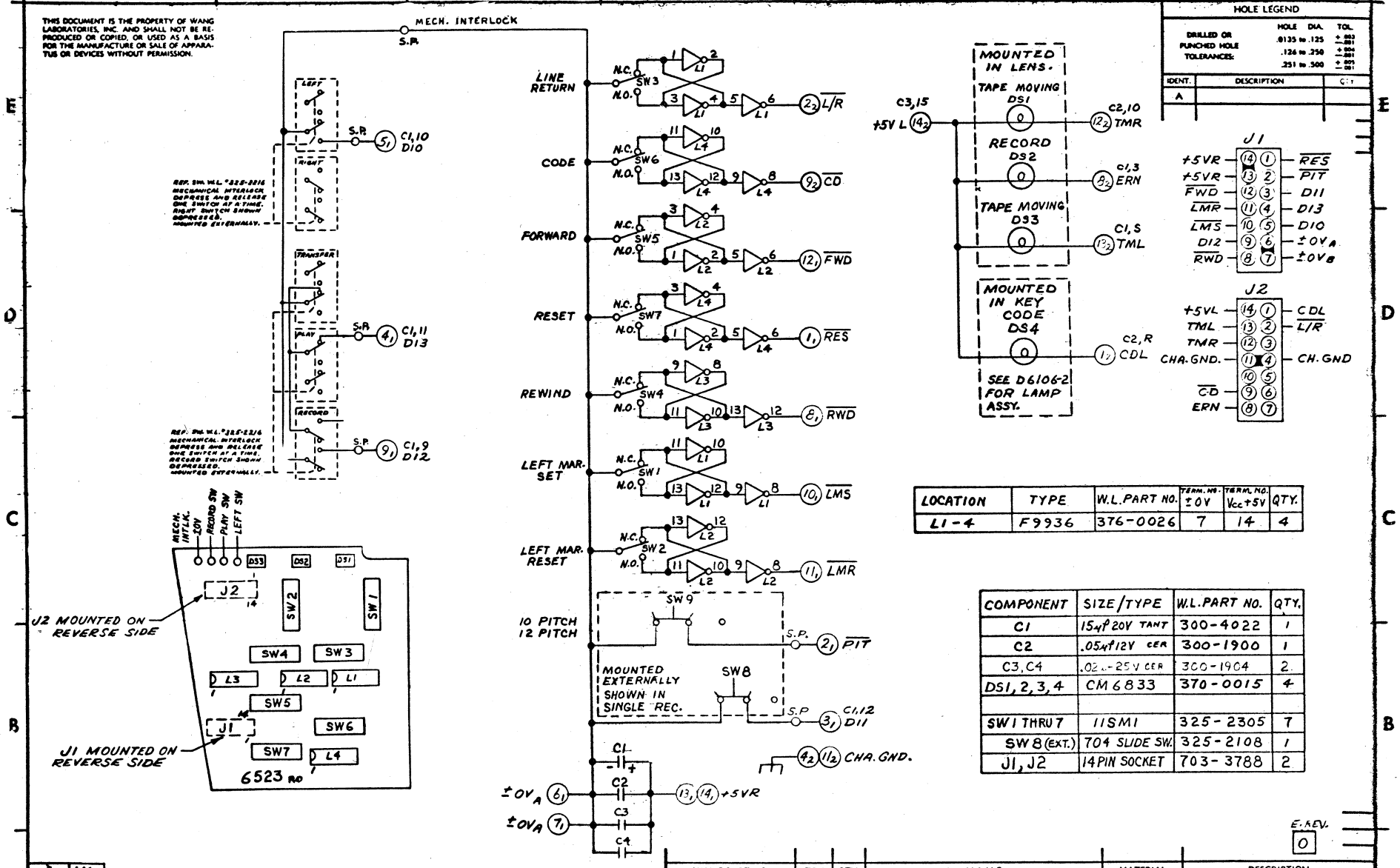

HOLE LEGEND

DRILLED OR PUNCHED HOLE TOLERANCES:	HOLE DIA.	TOL.
	.0135 to .125	+.003 −.001
	.126 to .250	+.004 −.001
	.251 to .500	+.005 −.001

IDENT.	DESCRIPTION	QTY.
A		

LOCATION	TYPE	W.L. PART NO.	TERM. NO. ±0V	TERM. NO. Vcc +5V	QTY.
L1-4	F9936	376-0026	7	14	4

COMPONENT	SIZE/TYPE	W.L. PART NO.	QTY.
C1	15μf 20V TANT	300-4022	1
C2	.05μf 12V CER	300-1900	1
C3, C4	.02μf 25V CER	300-1904	2
DS1, 2, 3, 4	CM 6833	370-0015	4
SW1 THRU 7	11SM1	325-2305	7
SW8 (EXT.)	704 SLIDE SW.	325-2108	1
J1, J2	14 PIN SOCKET	703-3788	2

E. REV. 0

NO.	REVISION	BY	DATE
1/0	CHANGED PER ECN. # 4212 APP'D:	LEC	6-6-74

WANG PART NO	ITEM	QTY	NAME	MATERIAL	DESCRIPTION
Qty. Per Unit / FIRST USED ON / ASSY USED ON			WANG LABORATORIES, INC. TEWKSBURY, MASS. U.S.A.		

BY	DATE	APPROVED BY	DATE
DWN RK	1-3-74	E ENGR	
CHK		M ENGR	
E. C. CONTROL		MFG ENGR	

MODEL NO. 1222 — SEE ENGRG SPECIFICATIONS No. ____ — TOL. EX. AS NOTED .XX ± .010 FRAC. ± 1/64 .XXX ± .005 ANG. ± 1°30' FINISH 125

TITLE SCHEMATIC LOGIBLOC #6523 LEFT KEYBOARD FOR MODEL 1222

WANG PART NUMBER	SIZE	DRAWING NUMBER	REV
	C	6523-1	2

SCALE — SHT — OF

THIS DOCUMENT IS THE PROPERTY OF WANG LABORATORIES, INC. AND SHALL NOT BE REPRODUCED OR COPIED, OR USED AS A BASIS FOR THE MANUFACTURE OR SALE OF APPARATUS OR DEVICES WITHOUT PERMISSION.

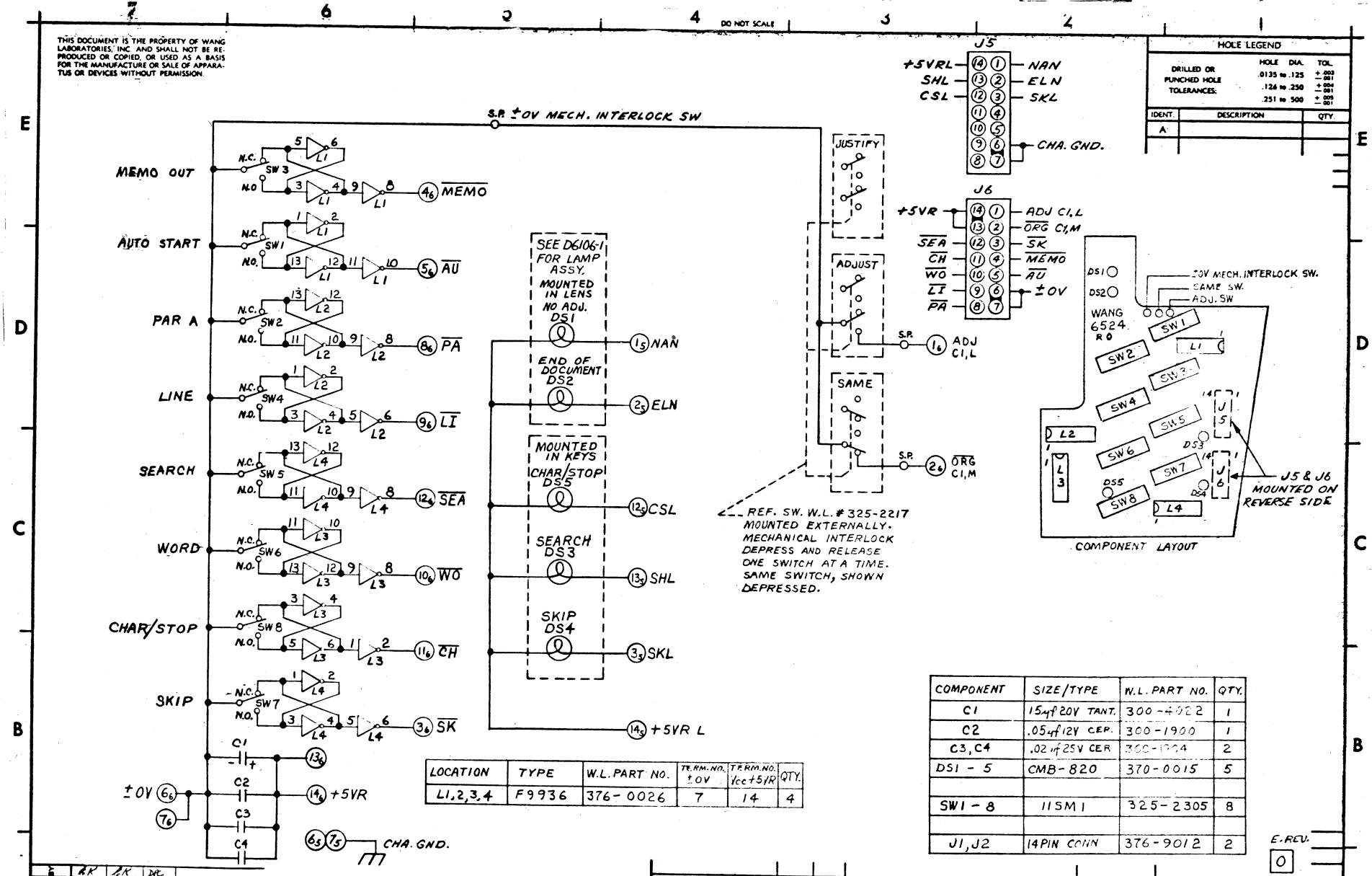

HOLE LEGEND

DRILLED OR PUNCHED HOLE TOLERANCES:	HOLE DIA.	TOL.
	.0135 to .125	+.003 −.001
	.126 to .250	+.004 −.001
	.251 to .500	+.005 −.001

IDENT.	DESCRIPTION	QTY.
A		

LOCATION	TYPE	W.L. PART NO.	TERM. NO. ±0V	TERM. NO. Vcc +5VR	QTY.
L1,2,3,4	F9936	376-0026	7	14	4

COMPONENT	SIZE/TYPE	W.L. PART NO.	QTY.
C1	15μf 20V TANT.	300-4022	1
C2	.05μf 12V CER.	300-1900	1
C3, C4	.02μf 25V CER	300-1904	2
DS1 - 5	CMB-820	370-0015	5
SW1 - 8	11SM1	325-2305	8
J1, J2	14PIN CONN	376-9012	2

E. REV. 0

NO.	REVISION	BY	DATE
A	CHANGED PER RFA-0754 APP'D:	RK	5-27-74
B	CHANGED PER RFA-0734 APP'D:	RK	5-7-74
1/0	CHANGED PER 4212 E.C.A. # APP'D:	DR	6-6-74

WANG PART NO	ITEM	QTY	NAME	MATERIAL	DESCRIPTION
Qty. Per Unit / FIRST USED ON / ASSY USED ON			WANG LABORATORIES, INC. TEWKSBURY, MASS. U.S.A.		

BY	DATE	APPROVED BY	DATE
DWN RK	1-2-73	E ENGR	
CHK		M ENGR	
E. C. CONTROL		MFG ENGR	

MODEL NO. 1222 — SEE ENGRG SPECIFICATIONS No. ____ — TOL. EX. AS NOTED .XX ± .010 FRAC. ± 1/64 .XXX ± .005 ANG. ± 1°30' FINISH 125

TITLE SCHEMATIC LOGIBLOC RIGHT KEYBOARD FOR MODEL 1222

WANG PART NUMBER	SIZE	DRAWING NUMBER	REV
	C	6524-1	0

SCALE — SHT — OF