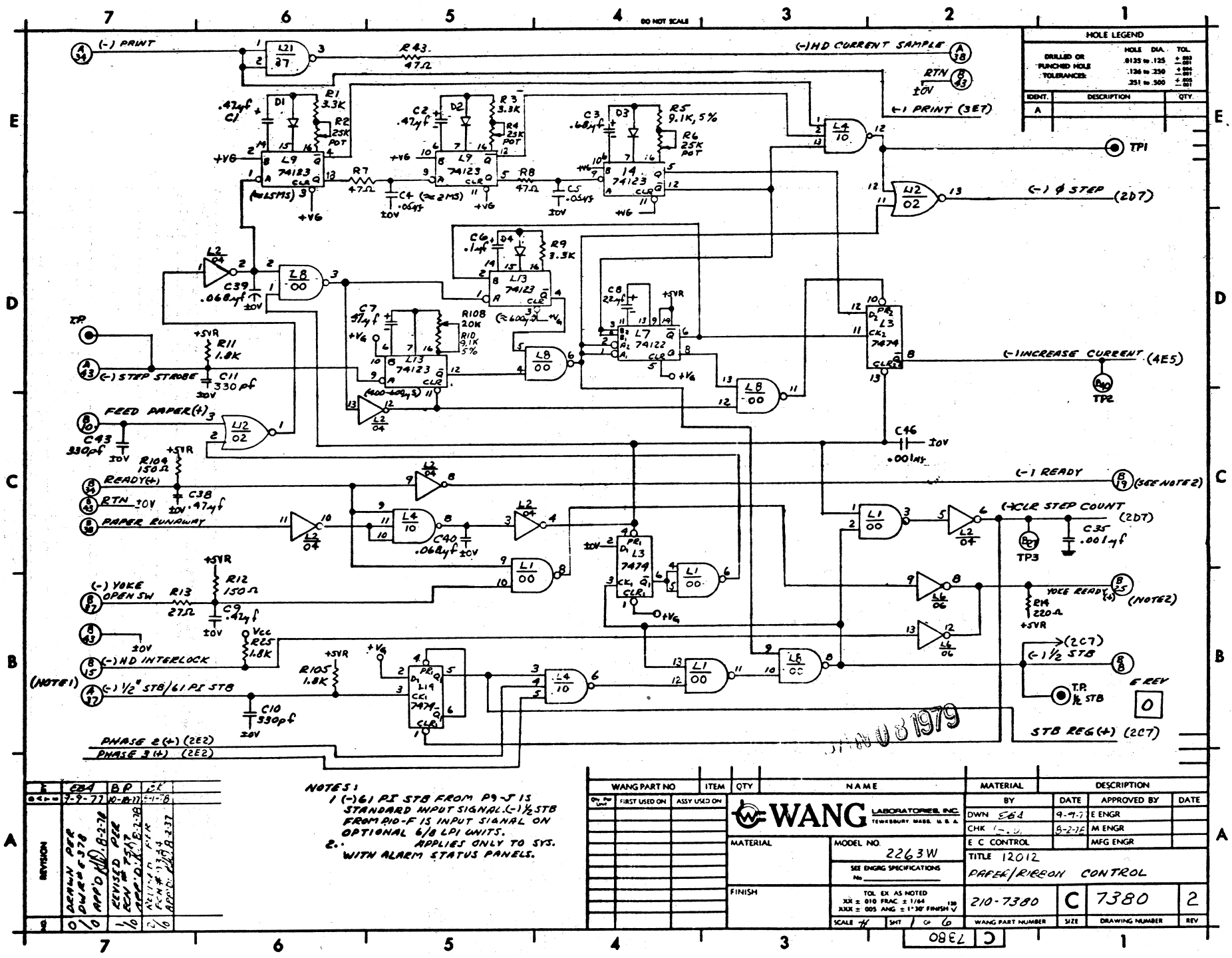
(-) PRINT
(-) HD CURRENT SAMPLE
RTN
(-) PRINT (3E7)
TP1
(-) Ø STEP (2D7)
TP
(-) STEP STROBE
FEED PAPER (+)
READY (+)
PAPER RUNAWAY
(-) INCREASE CURRENT (4E5)
TP2
(-) READY (SEE NOTE 2)
(-) CLR STEP COUNT (2D7)
TP3
(-) YOKE OPEN SW
YOKE READY (+) (NOTE 2)
(-) HD INTERLOCK
(NOTE 1) (-) 1/2" STB/61 PI STB
(-) 1/2 STB (2C7)
T.P. 1/2 STB
STB REG (+) (2C7)
PHASE 2 (+) (2E2)
PHASE 3 (+) (2E2)
NOTES:
1 (-) 61 PI STB FROM P9-J IS STANDARD INPUT SIGNAL. (-) 1/2 STB FROM P10-F IS INPUT SIGNAL ON OPTIONAL 6/8 LPI UNITS.
2. APPLIES ONLY TO SYS. WITH ALARM STATUS PANELS.
WANG LABORATORIES, INC.
MODEL NO. 2263W
TITLE 12012
PAPER/RIBBON CONTROL
210-7380 C 7380 2
SCALE 1/1 SHT 1 OF 6
JAN 08 1979

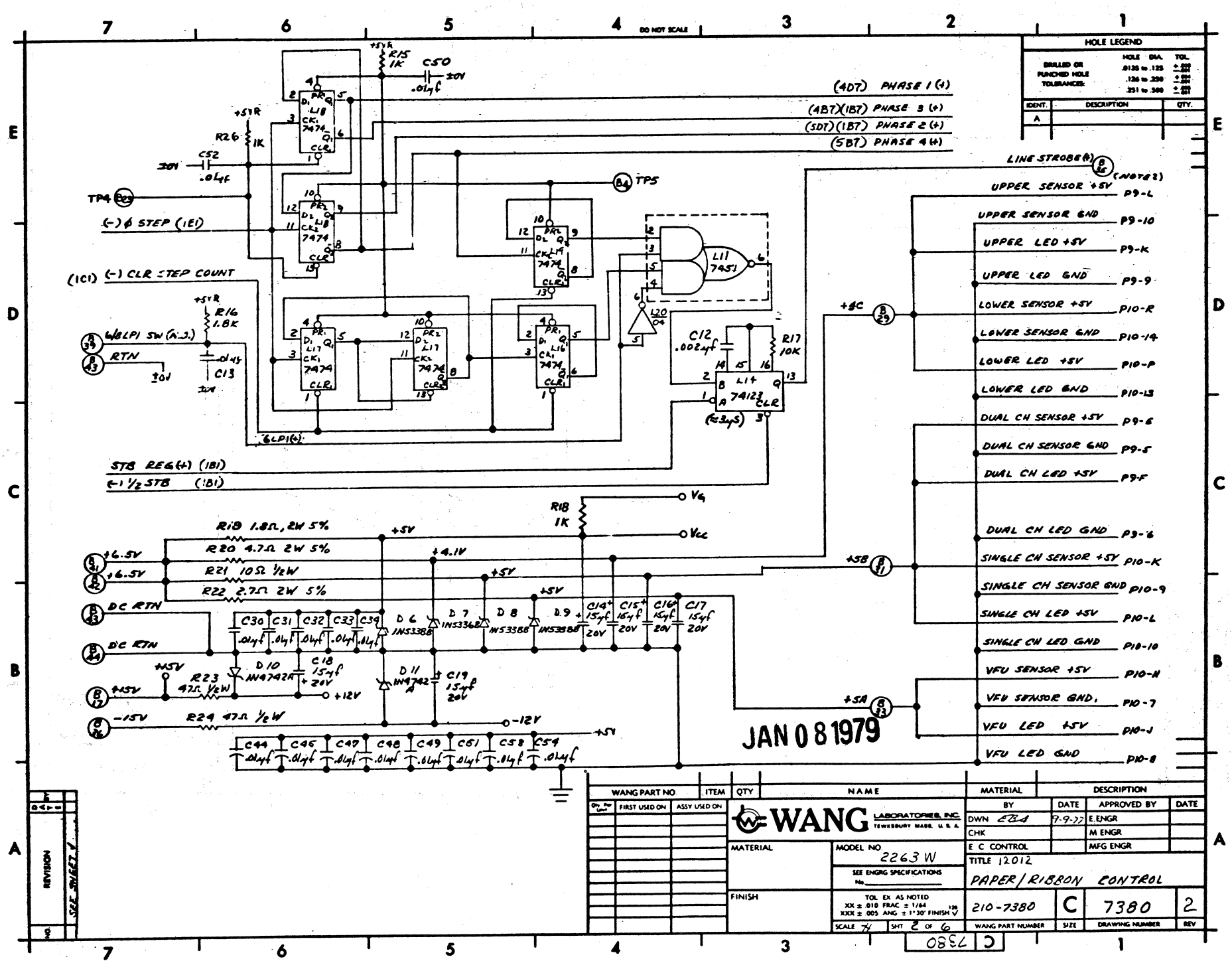
(4D7) PHASE 1 (+)
(4B7)(1B7) PHASE 3 (+)
(5D7)(1B7) PHASE 2 (+)
(5B7) PHASE 4 (+)
LINE STROBE (R) (NOTE 2)
TP4
(-) Ø STEP (1E1)
TP5
(1C1) (-) CLR STEP COUNT
6/8 LPI SW (N.O.)
RTN
STB REG (+) (1B1)
(-) 1/2 STB (1B1)
UPPER SENSOR +5V P9-L
UPPER SENSOR GND P9-10
UPPER LED +5V P9-K
UPPER LED GND P9-9
LOWER SENSOR +5V P10-R
LOWER SENSOR GND P10-14
LOWER LED +5V P10-P
LOWER LED GND P10-13
DUAL CH SENSOR +5V P9-6
DUAL CH SENSOR GND P9-5
DUAL CH LED +5V P9-F
DUAL CH LED GND P9-6
SINGLE CH SENSOR +5V P10-K
SINGLE CH SENSOR GND P10-9
SINGLE CH LED +5V P10-L
SINGLE CH LED GND P10-10
VFU SENSOR +5V P10-H
VFU SENSOR GND. P10-7
VFU LED +5V P10-J
VFU LED GND P10-8
+6.5V
DC RTN
+15V
-15V
+12V
-12V
+4.1V
JAN 08 1979
WANG LABORATORIES, INC.
MODEL NO. 2263W
TITLE 12012
PAPER/RIBBON CONTROL
210-7380 C 7380 2
SCALE 1/1 SHT 2 OF 6

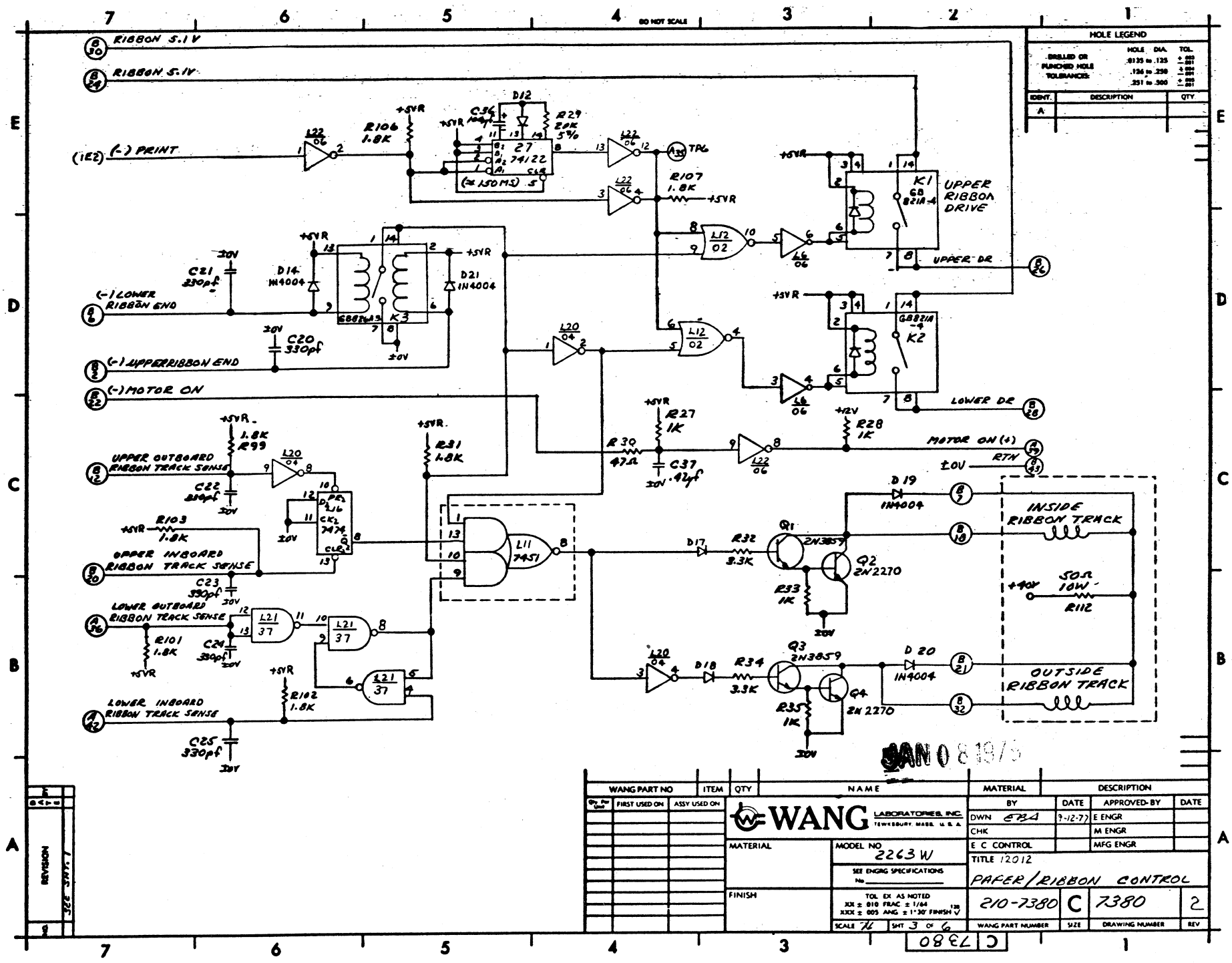
RIBBON S.1V
RIBBON S.1V
(-) PRINT
(-) LOWER RIBBON END
(-) UPPER RIBBON END
(-) MOTOR ON
UPPER OUTBOARD RIBBON TRACK SENSE
UPPER INBOARD RIBBON TRACK SENSE
LOWER OUTBOARD RIBBON TRACK SENSE
LOWER INBOARD RIBBON TRACK SENSE
UPPER RIBBON DRIVE
UPPER DR
LOWER DR
MOTOR ON (+)
RTN
INSIDE RIBBON TRACK
OUTSIDE RIBBON TRACK
JAN 08 1979
WANG LABORATORIES, INC.
MODEL NO 2263 W
PAPER/RIBBON CONTROL
210-7380 C 7380 2

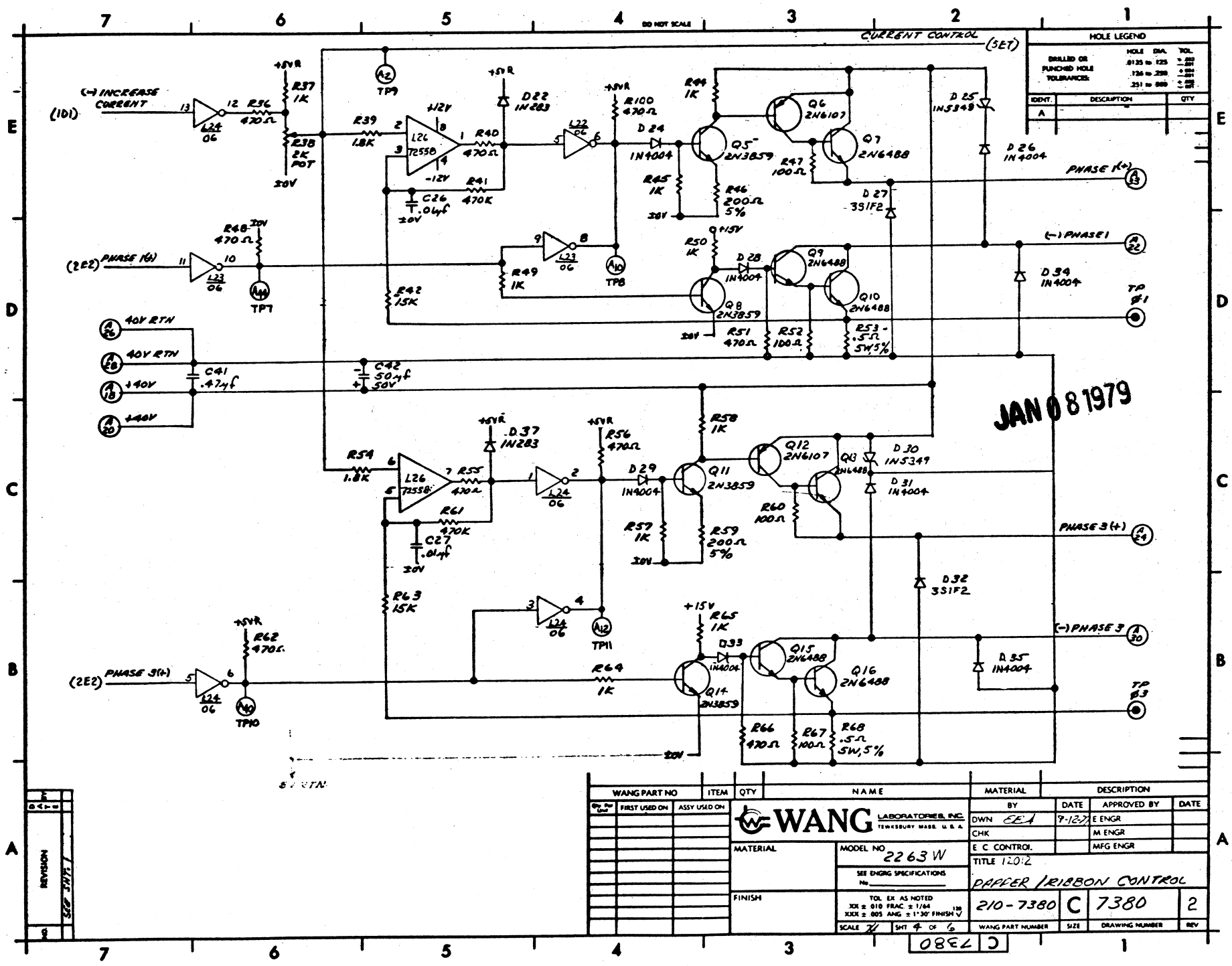
CURRENT CONTROL (SET)
(-) INCREASE CURRENT
PHASE 1(+)
PHASE 3(+)
(-) PHASE 1
(-) PHASE 3
40V RTN
+40V
JAN 08 1979
WANG LABORATORIES, INC.
MODEL NO 2263 W
PAPER/RIBBON CONTROL
210-7380 C 7380 2

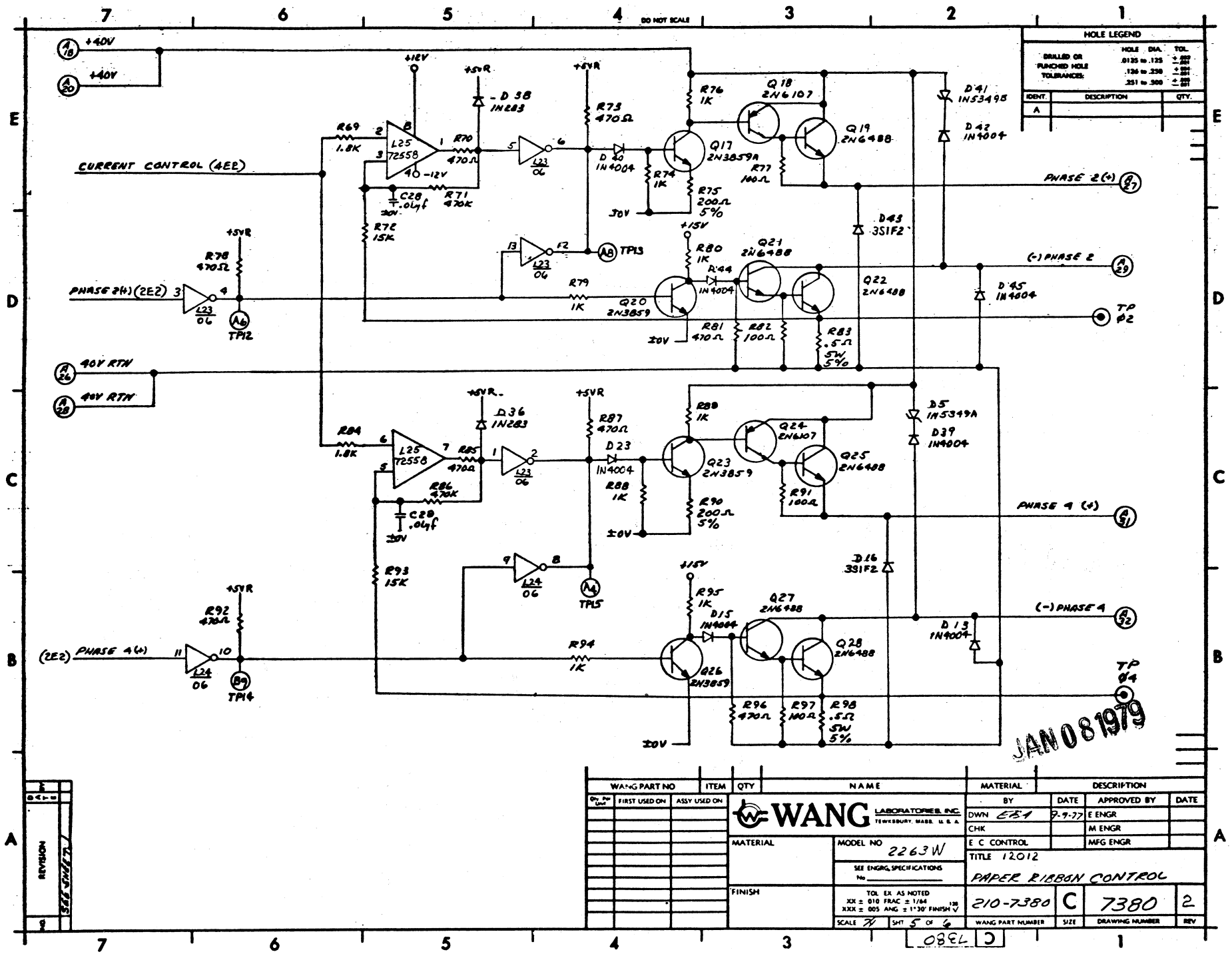

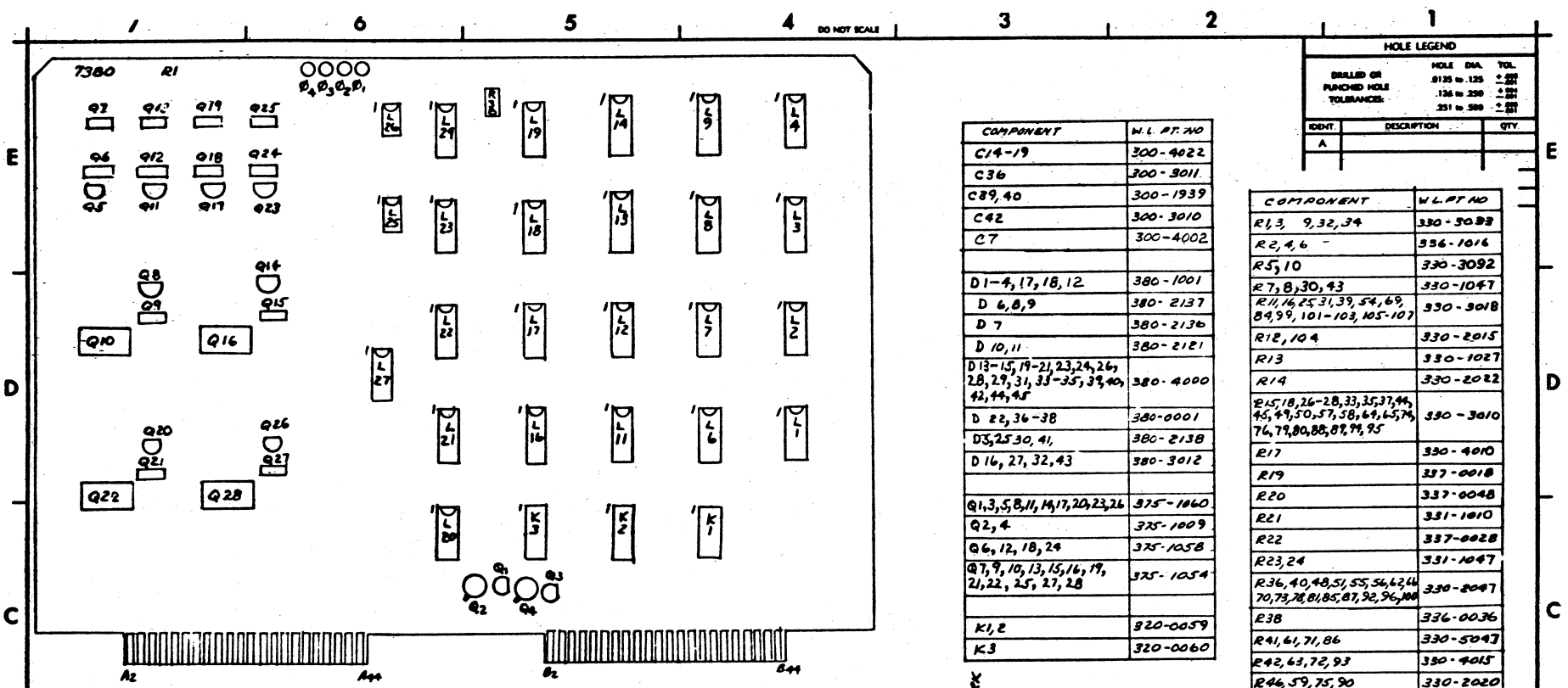

COMPONENT	W.L. PT. NO
C14-19	300-4022
C36	300-3011
C39,40	300-1939
C42	300-3010
C7	300-4002
D1-4, 17, 18, 12	380-1001
D 6,8,9	380-2137
D 7	380-2136
D 10,11	380-2121
D 13-15, 19-21, 23,24,26, 28, 29, 31, 33-35, 39, 40, 42, 44, 45	380-4000
D 22, 36-38	380-0001
D3, 25 30, 41,	380-2138
D 16, 27, 32, 43	380-3012
Q1,3,5,8,11,14,17,20,23,26	375-1060
Q2,4	375-1009
Q6,12,18,24	375-1058
Q7,9,10,13,15,16,19, 21,22, 25, 27, 28	375-1054
K1,2	320-0059
K3	320-0060

COMPONENT	W.L. PT NO
R1,3, 9,32,34	330-3033
R2,4,6	336-1016
R5,10	330-3092
R7,8,30,43	330-1047
R11,16,25,31,39,54,69, 84,99, 101-103, 105-107	330-3018
R12,104	330-2015
R13	330-1027
R14	330-2022
R15,18,26-28,33,35,37,44, 45,49,50,57,58,64,65,74, 76,79,80,88,89,94,95	330-3010
R17	330-4010
R19	337-0018
R20	337-0048
R21	331-1010
R22	337-0028
R23,24	331-1047
R36,40,48,51,55,56,62,66 70,73,78,81,85,87,92,96,100	330-2047
R38	336-0036
R41,61,71,86	330-5047
R42,63,72,93	330-4015
R46,59,75,90	330-2020
R47,52,60,67,77,82,91,97	330-2010
R53,68,83,98	334-0028
R29	330-4021
R108	336-0028
C1,2,6	300-4001
C3	300-4011
C4,5	300-1938
C8	300-4027
C9,37,38,41	300-1935
C10,20-25,43,11	300-1330
C35,46	300-1906
C12	300-1913
C13,26-34,44,45,47-54	300-1903

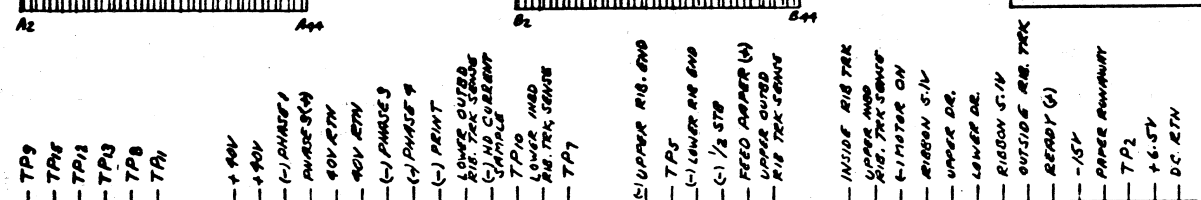

LOCATION	W.L. PT. NO	GND	Vcc
L1,8	376-0002	7	14
L2,20	376-0010	7	14
L3,14-19	376-0006	7	14
L4	376-0003	7	14
L6,22,23,24	376-0055	7	14
L7,21	376-0268	7	14
L9,13,14	376-0080	8	16
L11	376-0012	7	14
L12	376-0016	7	14
L21	376-0068	7	14
L25,26	376-0265	—	—

SPARES		
LOCAT.	W.L.PT. NO	SP.
L6	7406	2
L20	7409	2
L22	7406	1