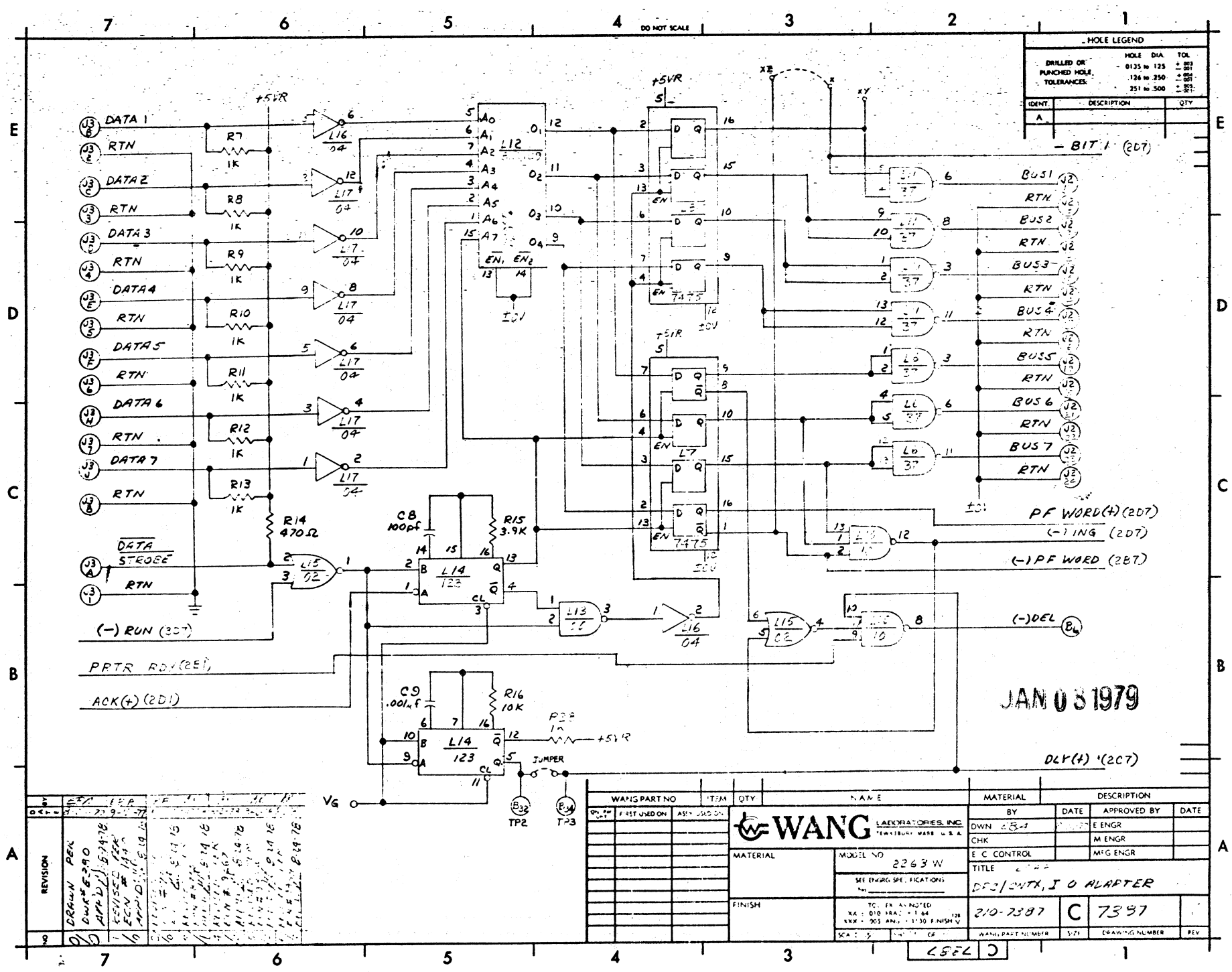
DATA 1
RTN
DATA 2
DATA 3
DATA 4
DATA 5
DATA 6
DATA 7
DATA STROBE
(-) RUN (3D7)
PRTR RDY (2E1)
ACK(+) (2D1)
(-) BIT 1 (2D7)
PF WORD(+) (2D7)
(-) ING (2D7)
(-) PF WORD (2B7)
(-)DEL
DLY(+) (2C7)
BUS1
BUS2
BUS3
BUS4
BUS5
BUS6
BUS7
JUMPER
TP2
TP3
HOLE LEGEND
WANG LABORATORIES, INC.
DPC CNTX I O ADAPTER
210-7387
C
7387
JAN 08 1979

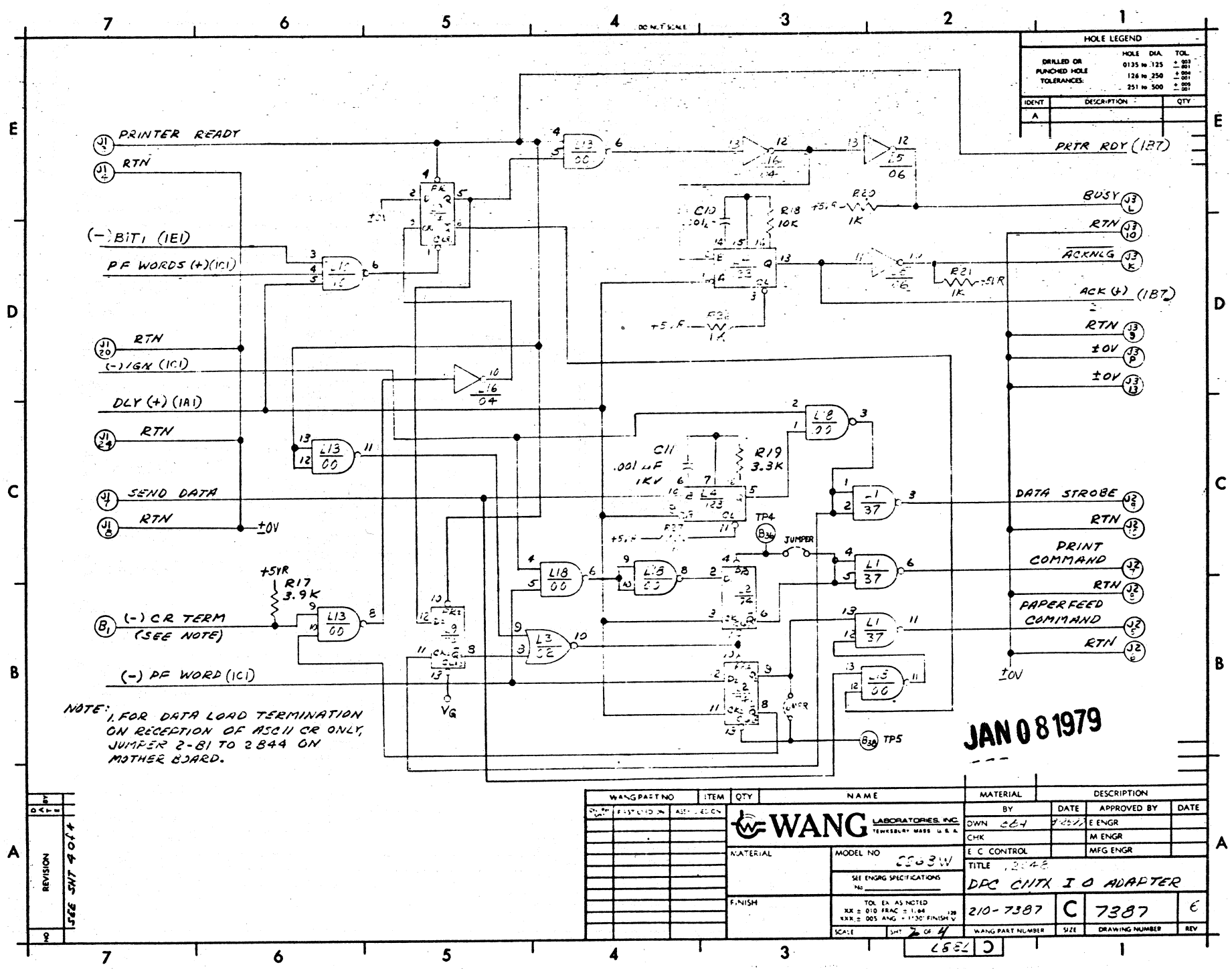
PRINTER READY
RTN
(-) BIT 1 (1E1)
PF WORDS (+)(1C1)
(-) IGN (1C1)
DLY (+) (1A1)
SEND DATA
(-) CR TERM (SEE NOTE)
(-) PF WORD (1C1)
PRTR RDY (1B7)
BUSY
ACKNLG
ACK (+) (1B7)
DATA STROBE
PRINT COMMAND
PAPERFEED COMMAND
TP4
TP5
JUMPER
NOTE: 1. FOR DATA LOAD TERMINATION ON RECEPTION OF ASCII CR ONLY, JUMPER 2-B1 TO 2B44 ON MOTHER BOARD.
HOLE LEGEND
WANG LABORATORIES, INC.
DPC CNTX I O ADAPTER
210-7387
C
7387
JAN 08 1979

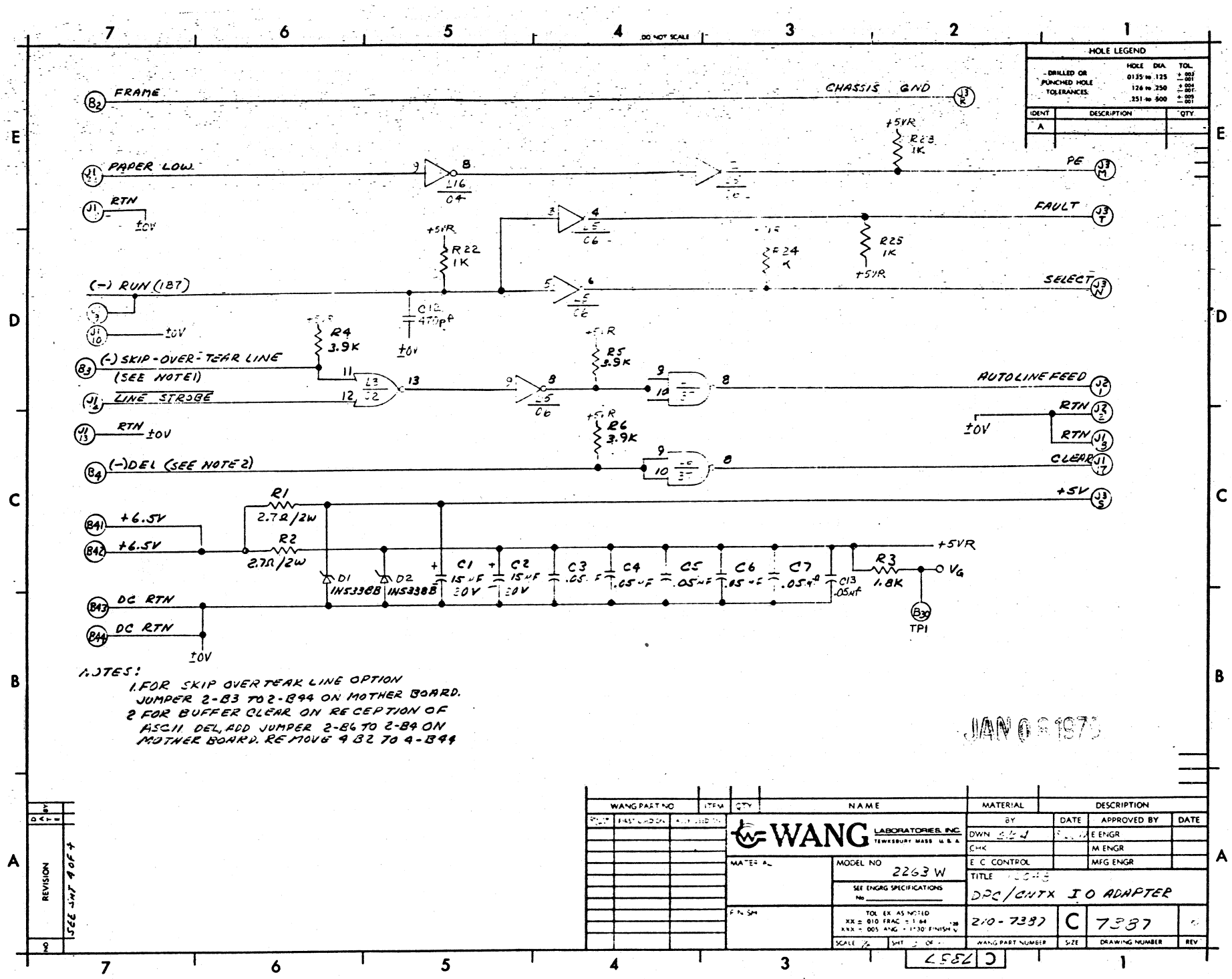

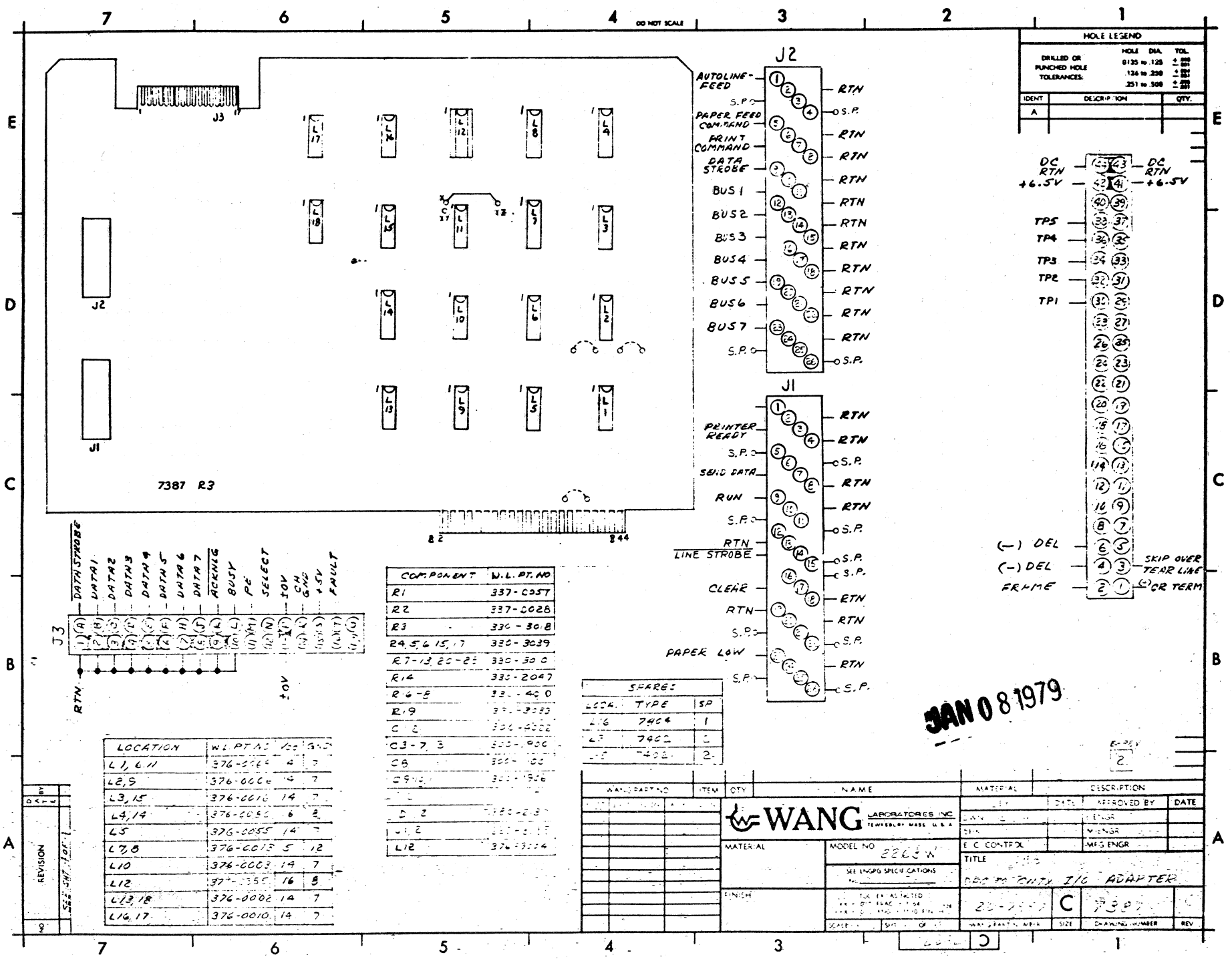

COMPONENT	W.L. PT. NO
R1	337-0057
R2	337-0028
R3	330-3018
R4,5,6 R15,17	330-3039
R7-13, 20-25	330-3000
R14	330-2047
R16-8	330-4000
R19	330-3333
C 2	300-0002
C3-7, 3	300-0006
C8	300-0006
C9-12	300-1906
D 2	[illegible]
D 2	[illegible]
L12	376-[illegible]

SPARES		
LOCA.	TYPE	SP
L16	7404	1
L3	7402	2
L15	7402	2

LOCATION	W.L. PT. NO	VOL	GND
L1, 6, 11	376-0009	4	7
L2, 9	376-0006	14	7
L3, 15	376-0010	14	7
L4, 14	376-0052	6	2
L5	376-0055	14	7
L7, 8	376-0013	5	12
L10	376-0003	14	7
L12	376-0055	16	8
L13, 18	376-0002	14	7
L16, 17	376-0010	14	7