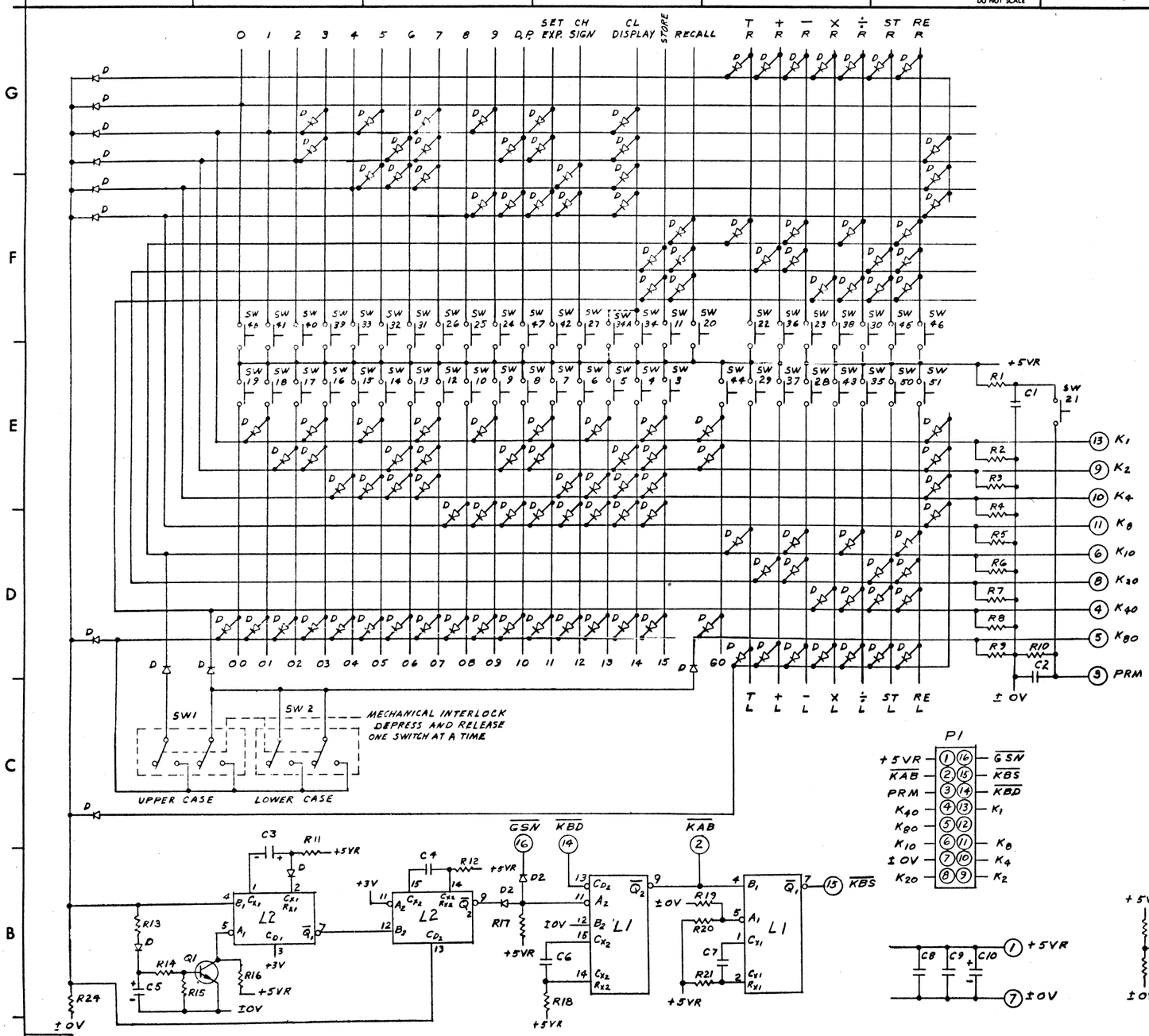

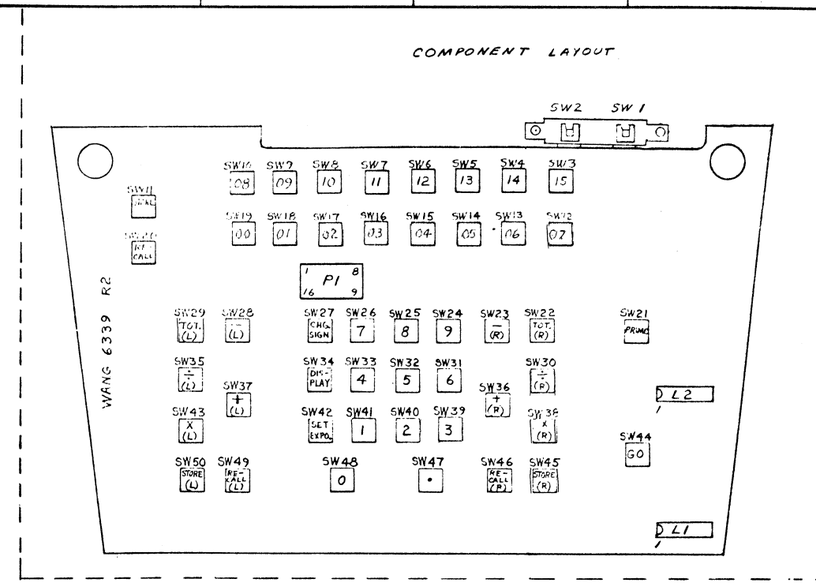

LOCATION	TYPE	W.L. PART No.	TERM. No. ±0V	TERM. No. V_{cc} +5VR	QTY
L1,2	9602	376-0104	8	16	2

COMPONENT	SIZE/TYPE	W. L. PART NO.	QTY
R1	100K 1/4W	330-5010	1
R2,3,4,5,6,7,8,9,22	2.2K 1/4W	330-3022	9
R10,24,13	220Ω 1/4W	330-2022	2
R19,23	3.3K 1/4W	330-3033	2
R11,12	33K 1/4W	330-4033	2
R18,21	10K 1/4W	330-4010	2
R16,17	4.7K 1/4W	330-3047	2
R22	1.2K 1/4W	330-3012	1
C1	.01μF CER.	300-1903	1
C2	.0024F CER.	300-1913	1
C3	.68μF TANT.	300-4011	1
C6	220 PF CER.	300-1220	1
C7	82 PF CER	300-1082	1
C8,9	.05μF CER	300-1900	2
C10	15μF 20V TANT	300-4022	1
C4	.001μF CER	300-1906	1
D	DIODE SIL	380-1001	136
D2	DIODE GER.	380-0000	1
P1	CABLE ASS'Y	420-2000	1
SW1,2	PUSH BUTTON	325-2220	2
SW3-10,12-19	OAK SW. SPST 7/16"	325-2405	16
SW11,20-50	OAK SW. SPST 7/16"	325-2413	31
R14	8.2K 1/4W	330-3082	1
R15	12K 1/4W	330-4012	1
C5	3.3μF 15V TANT	300-4016	1
Q1	TRST. SIL	375-1005	1
TRANSIPAD	SMALL	375-9004	1

NOTE
1. P.C. BOARD WITH 3 TRANSISTORS, SEE DWG. D-6246-1

WANG LABORATORIES INC.
TEWKSBURY, MASS.

MODEL NO. 400L | DRAWN AK 8-24-73 | APP. | CHECKED | APP.

TITLE SCHEMATIC LOGIBLOC #6339
KEYBOARD

SHT OF | DWG. NO. D 6339-1 | REV.

D 6339-1

REVISION