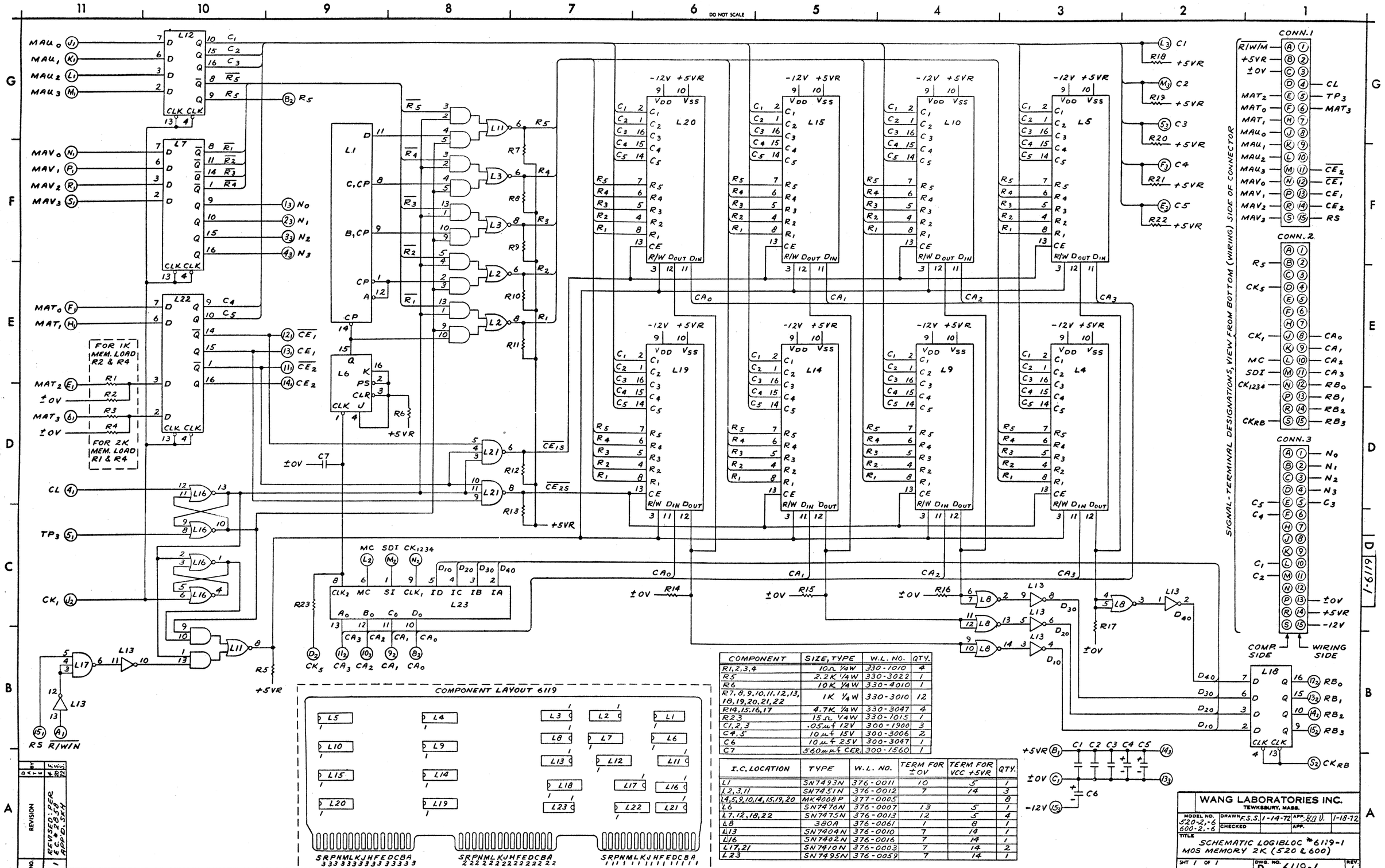

COMPONENT	SIZE, TYPE	W.L. NO.	QTY.
R1,2,3,4	10Ω ¼W	330-1010	4
R5	2.2K ¼W	330-3022	1
R6	10K ¼W	330-4010	1
R7,8,9,10,11,12,13, 18,19,20,21,22	1K ¼W	330-3010	12
R14,15,16,17	4.7K ¼W	330-3047	4
R23	15Ω ¼W	330-1015	1
C1,2,3	.05μf 12V	300-1900	3
C4,5	10μf 15V	300-3006	2
C6	10μf 25V	300-3047	1
C7	560μμf CER.	300-1560	1

I.C. LOCATION	TYPE	W.L. NO.	TERM FOR ±0V	TERM FOR VCC +5VR	QTY.
L1	SN7493N	376-0011	10	5	1
L2,3,11	SN7451N	376-0012	7	14	3
L4,5,9,10,14,15,19,20	MK4008P	377-0005			8
L6	SN7476N	376-0007	13	5	1
L7,12,18,22	SN7475N	376-0013	12	5	4
L8	380A	376-0061	1	8	1
L13	SN7404N	376-0010	7	14	1
L16	SN7402N	376-0016	7	14	1
L17,21	SN7410N	376-0003	7	14	2
L23	SN7495N	376-0059	7	14	1