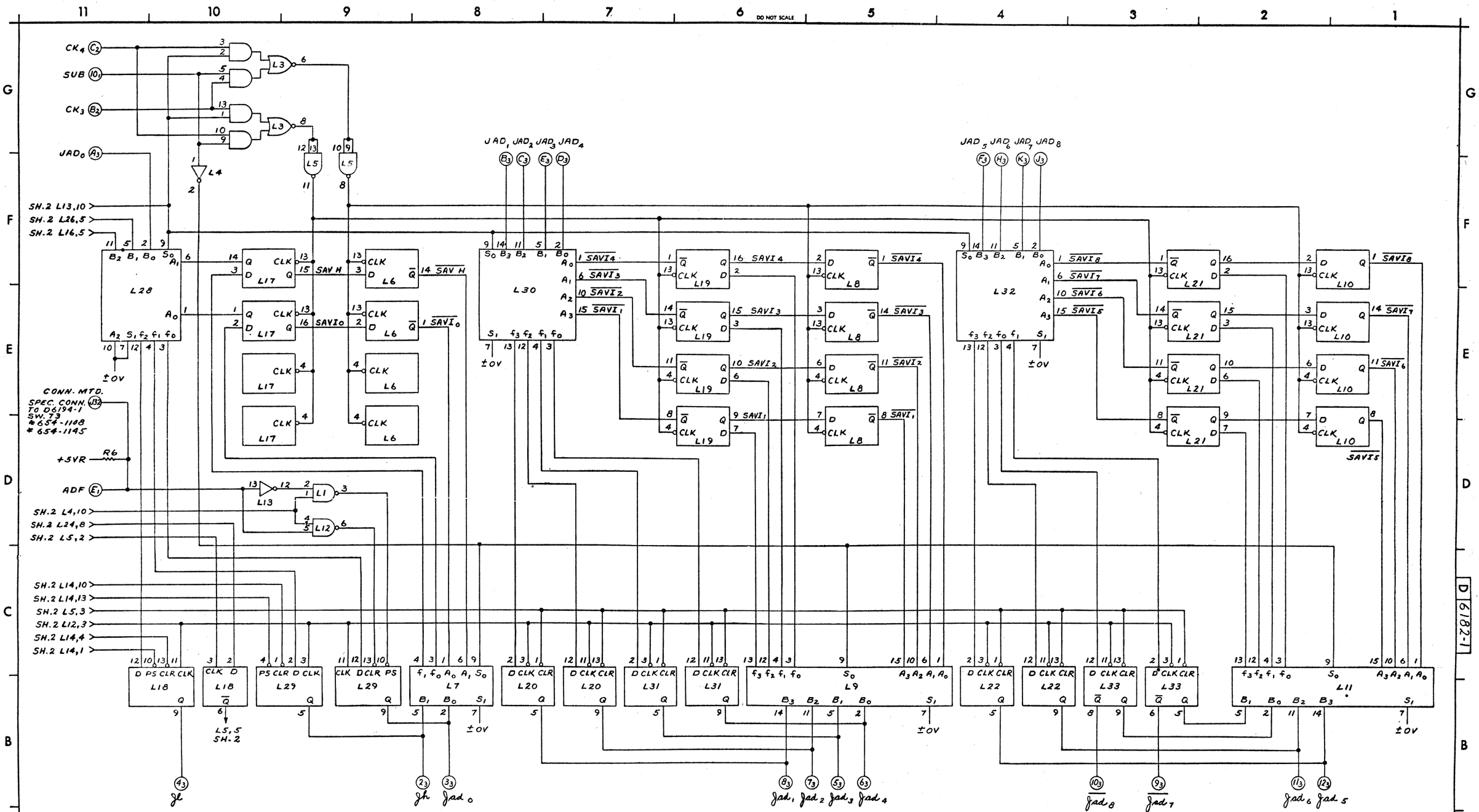

NO	REVISION	DATE	BY
1	REVISED PER E.C.# 2737 ADD'D. SK NO	2 F. 74	S.
2	REVISED PER E.C.# 3762 ADD'D. SK NO.	9 F. 75	S.

WANG LABORATORIES INC.
TEWKSBURY, MASS.

MODEL NO.	DRAWN	CHECKED	APP.	APP.
520	F.S.S. 11-12-71		HAV	2-14-72

TITLE: SCHEMATIC LOGIBLOC #6182-1 ROM ADDRESS

SHT 1 OF 2 | DWG. NO. D 6182-1 | REV. 2

D 6182-1

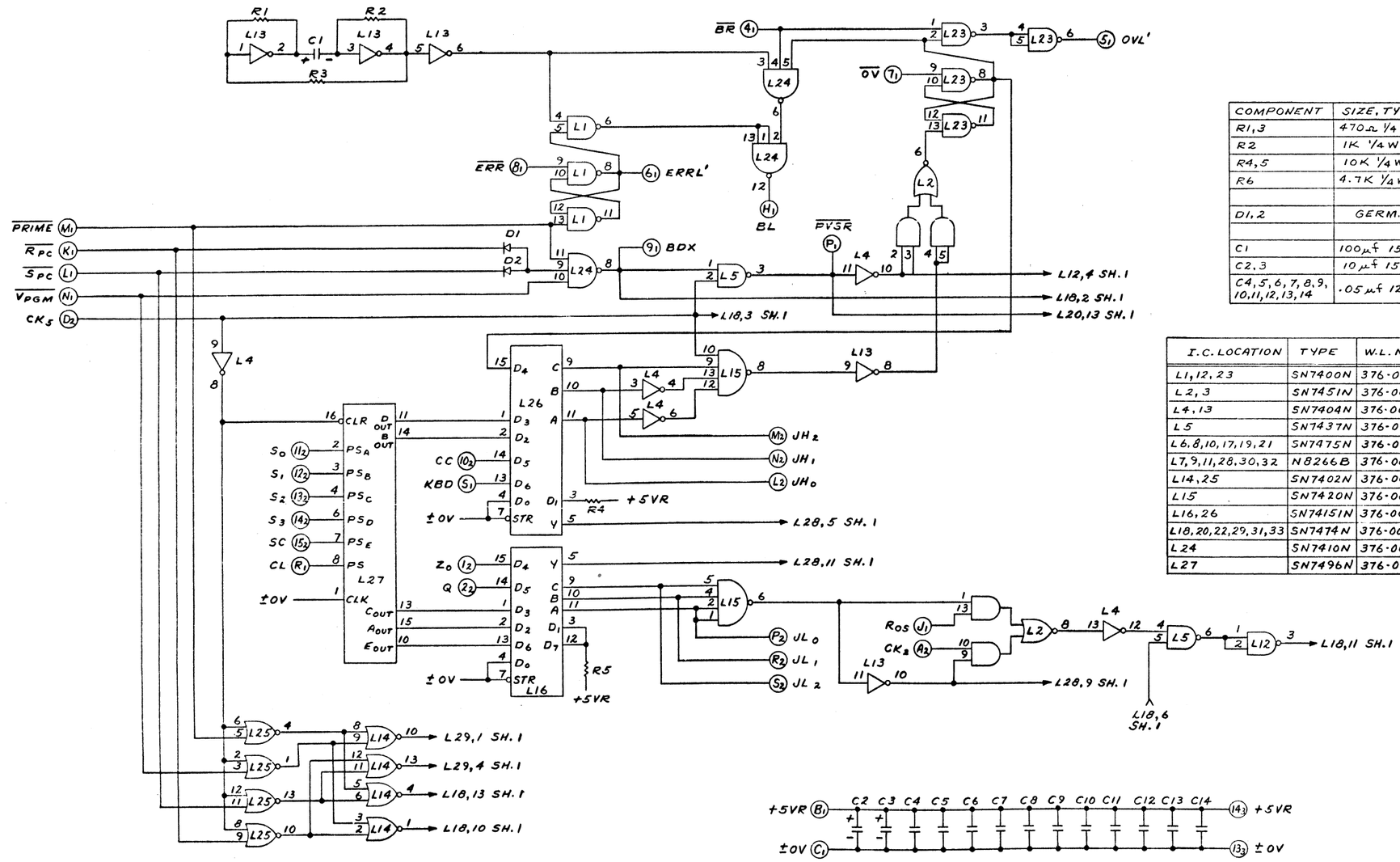

COMPONENT	SIZE, TYPE	W.L. NO.	QTY.
R1,3	470Ω 1/4 W	330-2047	2
R2	1K 1/4 W	330-3010	1
R4,5	10K 1/4 W	330-4010	2
R6	4.7K 1/4 W	330-3047	1
D1,2	GERM.	380-0000	2
C1	100μf 15V	300-3011	1
C2,3	10μf 15V	300-3006	2
C4,5,6,7,8,9,10,11,12,13,14	.05μf 12V	300-1900	11

I.C. LOCATION	TYPE	W.L. NO.	TERM FOR ±0V	TERM FOR VCC +5VR	QTY.
L1,12,23	SN7400N	376-0002	7	14	3
L2,3	SN7451N	376-0012	7	14	2
L4,13	SN7404N	376-0010	7	14	2
L5	SN7437N	376-0068	7	14	1
L6,8,10,17,19,21	SN7475N	376-0013	12	5	6
L7,9,11,28,30,32	N8266B	376-0041	8	16	6
L14,25	SN7402N	376-0016	7	14	2
L15	SN7420N	376-0004	7	14	1
L16,26	SN74151N	376-0047	8	16	2
L18,20,22,29,31,33	SN7474N	376-0006	7	14	6
L24	SN7410N	376-0003	7	14	1
L27	SN7496N	376-0065	12	5	1

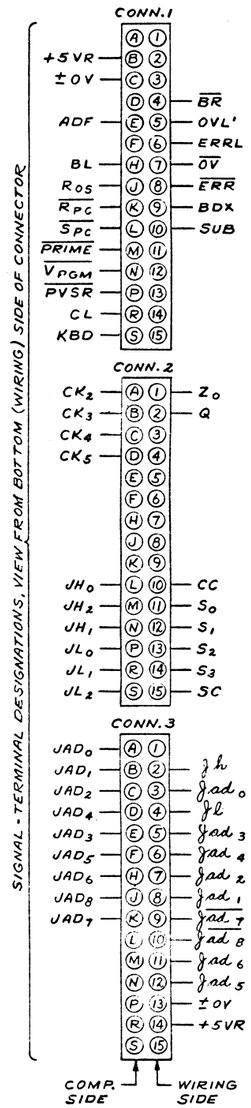

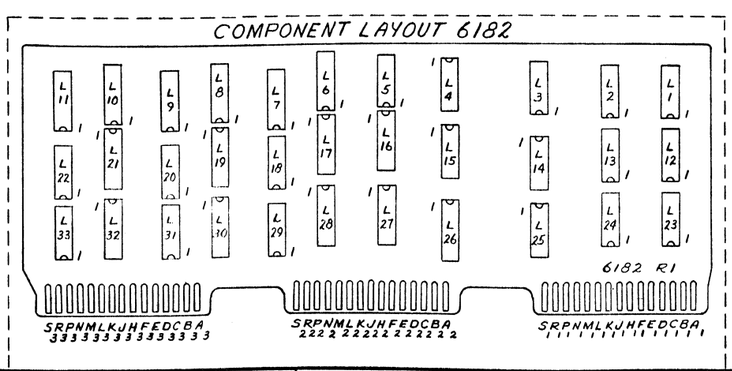

WANG LABORATORIES INC. TEWKSBURY, MASS.	
MODEL NO. 520	DRAWN F.S.S. 11-10-71 APP. 2-14-72
	CHECKED APP.
TITLE SCHEMATIC LOGIBLOC #6182-1 ROM ADDRESS	
SHT 2 OF 2	DWG. NO. D 6182-1 REV 2

NO	REVISION	DATE	BY