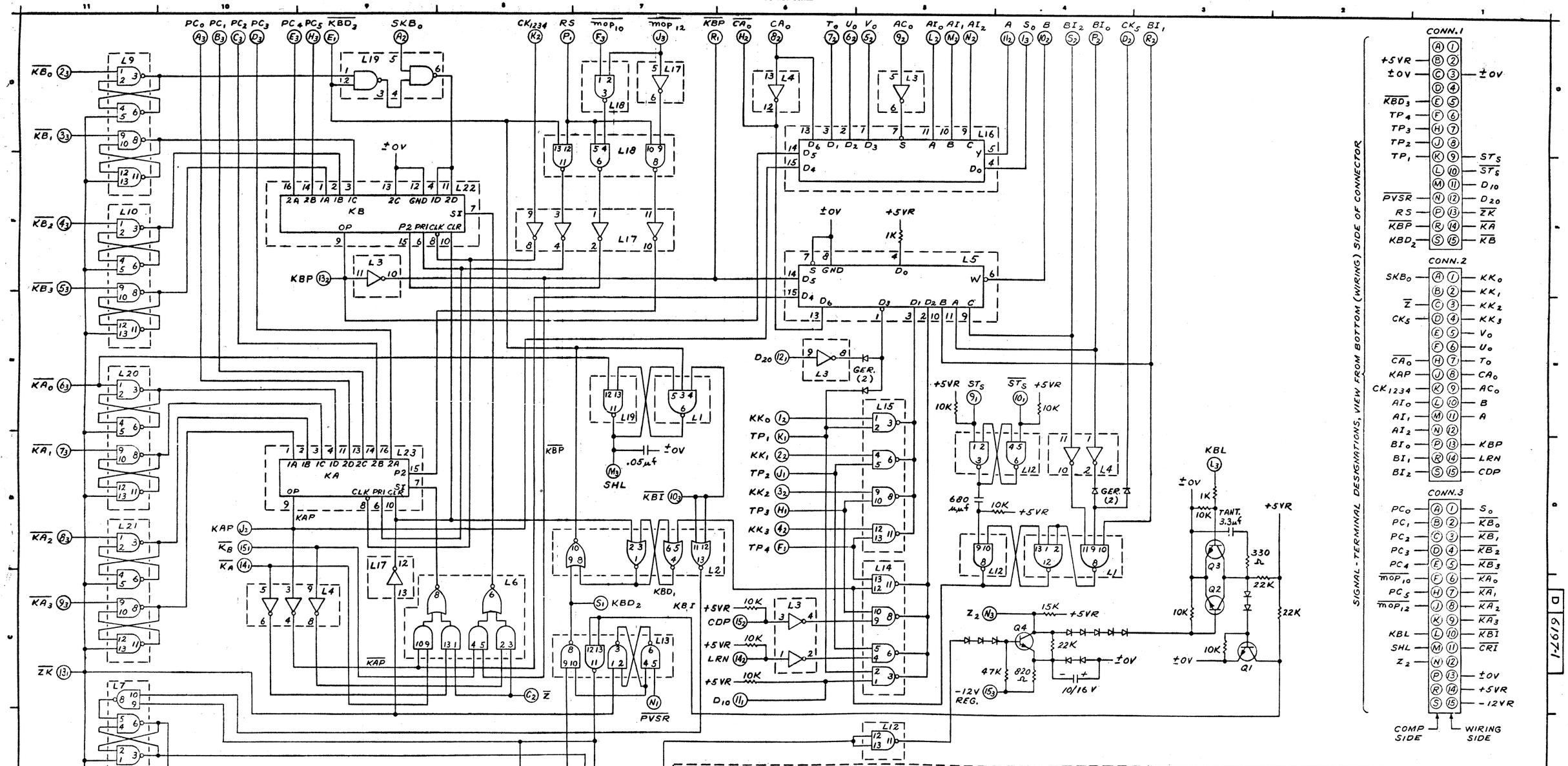

COMPONENT LAYOUT 6197

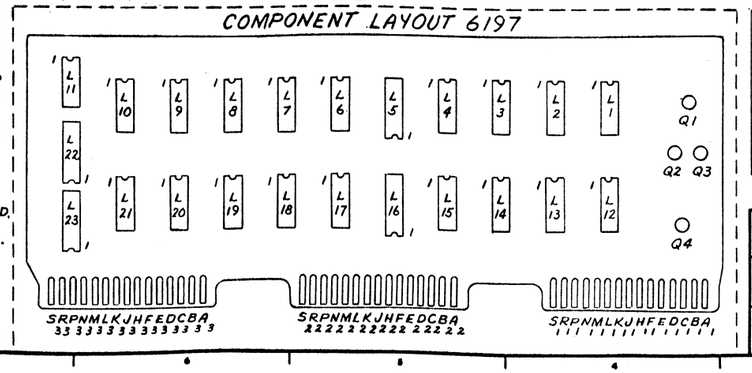

I.C. LOCATION	TYPE	W.L. NO.	TERM FOR ±0V	TERM FOR VCC +5VR	QTY.
L13,18,19	SN7400N	376-0002	7	14	3
L2	SN7402N	376-0016	7	14	1
L3,4,17	SN7404N	376-0010	7	14	3
L1,8	SN7410N	376-0003	7	14	2
L6	SN7451N	376-0012	7	14	1
L22,23	SN7494N	376-0064	12	5	2
L7,9,10,12,14,15,20,21	F9946	376-0023	7	14	8
L11	F9935	376-0025	7	14	1
L5,16	SN74151N	376-0047	8	16	2

IDENT	QTY	NAME	MATERIAL	DESCRIPTION

TOL. EX. AS NOTED .XX ±.010 .XXX ±.005 ANG. ±0°30' FRAC. ±1/64 FINISH

WANG LABORATORIES, INC. TEWKSBURY, MASS. U.S.A.

DR F.S.S. DATE 1-4-72
CHK DATE
APPD DATE 1-6-72
MODEL No. 520 W.O. No. SCALE SHEET OF
TITLE SCHEMATIC LOGIBLOC #6197-1 KA & KB REGISTER

PART NUMBER	REV	SIZE	DRAWING NUMBER
	1	D	6197-1

REVISION NO. | BY | DATE

D 6197-1