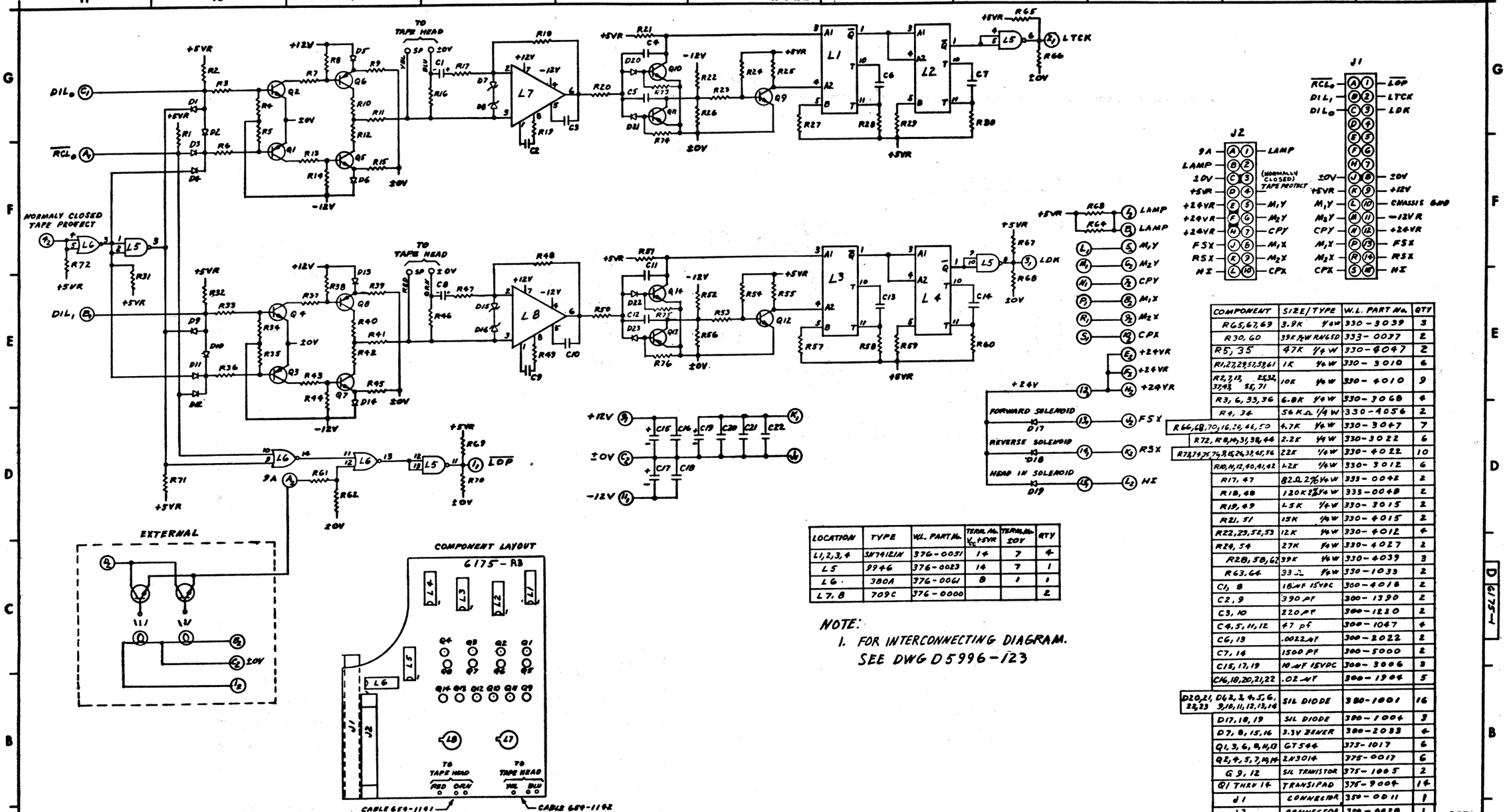

LOCATION	TYPE	W.L. PART No.	TERM. No. V_{CC} +5VR	TERM. No. ±0V	QTY
L1,2,3,4	SN7412IN	376-0051	14	7	4
L5	9946	376-0023	14	7	1
L6	380A	376-0061	8	1	1
L7, 8	709C	376-0000			2

NOTE:
1. FOR INTERCONNECTING DIAGRAM. SEE DWG D5996-123

COMPONENT	SIZE/TYPE	W.L. PART No.	QTY
R65,67,69	3.9K 1/4W	330-3039	3
R30, 60	39K 1/2W RN65D	333-0037	2
R5, 35	47K 1/4W	330-4047	2
R1,27,29,57,59,61	1K 1/4W	330-3010	6
R2,7,13, 25,32, 37,43, 56,71	10K 1/4W	330-4010	9
R3, 6, 33, 36	6.8K 1/4W	330-3068	4
R4, 34	56K Ω 1/4W	330-4056	2
R66,68,70,16,20,46,50	4.7K 1/4W	330-3047	7
R72, R8,14,31,38,44	2.2K 1/4W	330-3022	6
R73,74,75,79,8,15,24,33,45,56	22K 1/4W	330-4022	10
R10,11,12,40,41,42	1.2K 1/4W	330-3012	6
R17, 47	82Ω 2% 1/4W	333-0042	2
R18, 48	120K 2% 1/4W	333-0048	2
R19, 49	1.5K 1/4W	330-3015	2
R21, 51	15K 1/4W	330-4015	2
R22,23,52,53	12K 1/4W	330-4012	4
R24, 54	27K 1/4W	330-4027	2
R28,58,62	39K 1/4W	330-4039	3
R63,64	33Ω 1/4W	330-1033	2
C1, 8	16μF 15VDC	300-4018	2
C2, 9	390 pF	300-1390	2
C3, 10	220 pF	300-1220	2
C4,5,11,12	47 pf	300-1047	4
C6, 13	.0022μF	300-2022	2
C7, 14	1500 pF	300-5000	2
C15,17,19	10μF 15VDC	300-3006	3
C16,18,20,21,22	.02μF	300-1904	5
D20,21, D42,3,4,5,6, 22,23 9,10,11,12,13,14	SIL DIODE	380-1001	16
D17,18,19	SIL DIODE	380-1004	3
D7, 8, 15, 16	3.3V ZENER	380-2033	4
Q1,3,6,8,11,13	GT544	375-1017	6
Q2,4,5,7,14,14	2N3014	375-0017	6
Q 9, 12	SIL TRANSISTOR	375-1005	2
Q1 THRU 14	TRANSIPAD	375-9004	14
J1	CONNECTOR	350-0011	1
J2	CONNECTOR	350-0028	1

E.REV. 9

REV	REVISION	DRAWN	CHECKED	APPD	DATE
1	PER ECN 3078 THR PROTECT WAS ON ⑤ ADDED CIRCUIT L6-L7 WAS SS AND 2.2K RESISTOR. APPD SKH				6-20-72
2	REVISED PER ECN 3088 APPD SKH				7-10-72
3	REVISED PER ECN 3088 APPD SKH				7-10-72
4	REVISED PER ECN #3091 APPD SKH				7-27-72
5	REVISED PER E.C.N. #3098 APP'D SKH				8-28-72
6	PER ECN 3131 Q10, 14 WAS SIL TRANSISTOR APPD SKH				8-10-73
7	PER ECN #3182 DILITED KEY BUFFER WAS LP2 NOW LP1 APPD SKH				8-30-73
8	PER ECN #3183 ADDED R33, 7 R35 APPD SKH				8-30-73
9	PER ECN #3269 J1 CB WAS 25-4F164 APPD SKH				9-27-73
10	PER ECN #3268 R20, 30 WAS 10K APPD SKH				9-28-73
11	REV. PER ECN #3845 APP'D SKH				4-3-74
12	REVISED PER ECN #4395 APP'D P.A.R.				10-18-74

DEC 07 1978

WANG LABORATORIES INC.
TEWKSBURY, MASS.

MODEL NO. TD 24 | DRAWN | CHECKED 12/2/71 | APPD | APPD 3/7/72
TITLE SCHEMATIC INSIDILOC # 6175
TAPE AMPLIFIER BOARD
SHT OF | DWG. NO. D 6175 | REV 12