THIS DOCUMENT IS THE PROPERTY OF WANG LABORATORIES, INC. AND SHALL NOT BE REPRODUCED OR COPIED, OR USED AS A BASIS FOR THE MANUFACTURE OR SALE OF APPARATUS OR DEVICES WITHOUT PERMISSION.

DO NOT SCALE

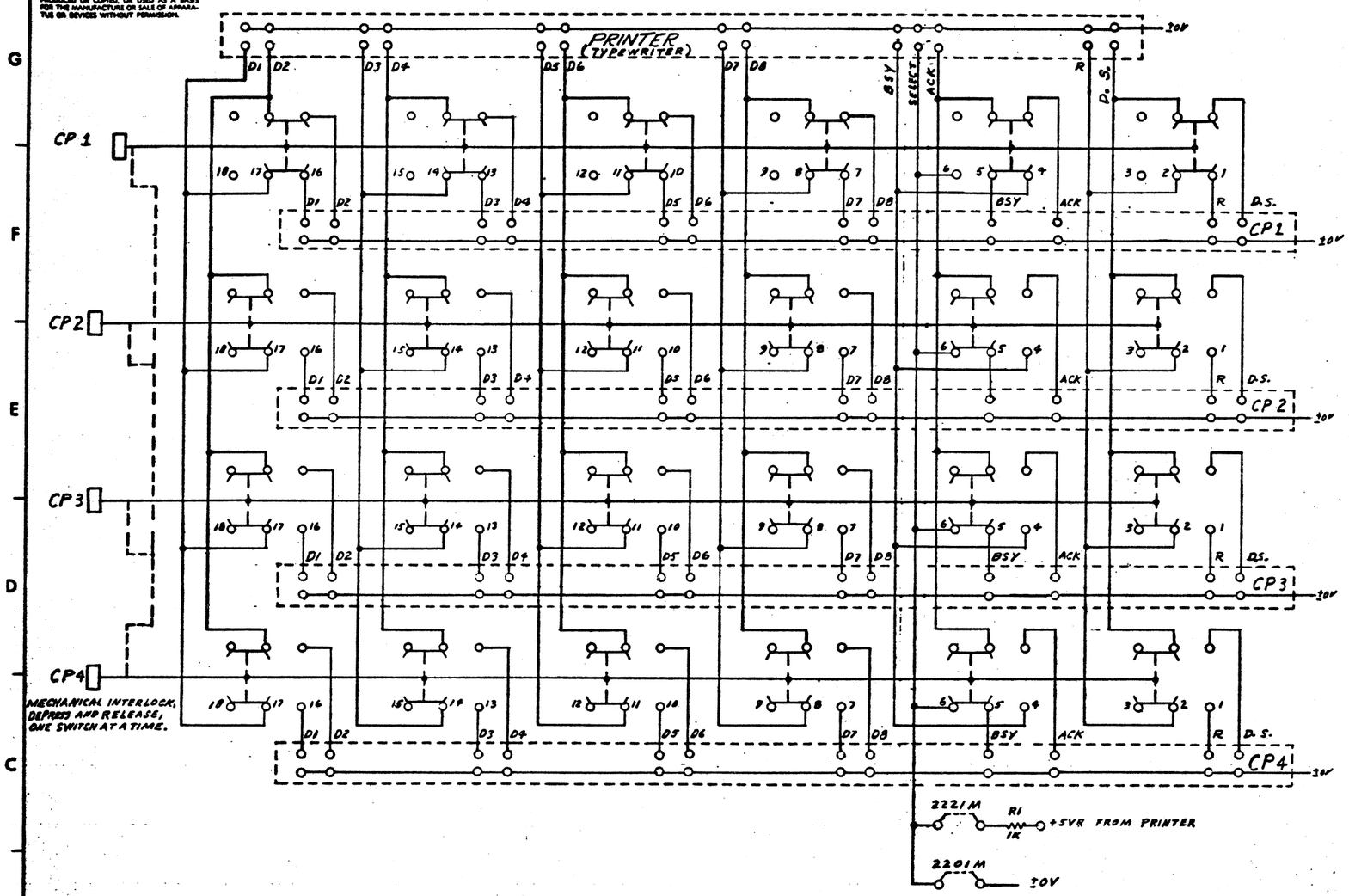


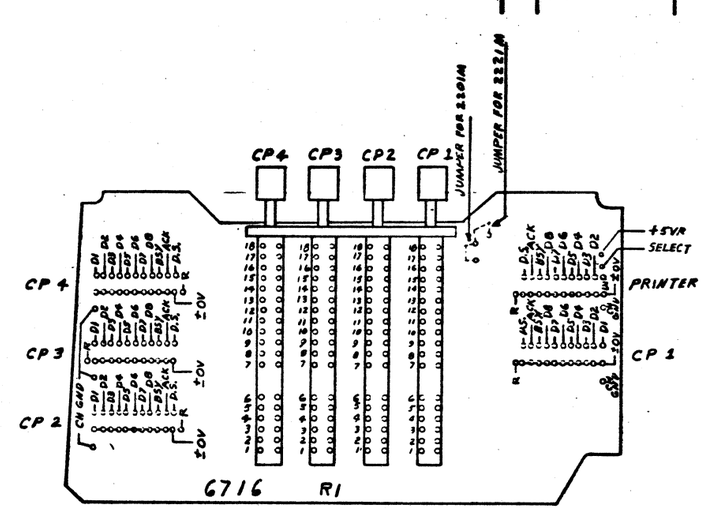


| MODEL 2201/M | MODEL 2221/M | COMPONENT | W.L. PART NO. | |
|---|---|---|---|---|
| | 1 | GANG SWITCH | 325-2227 | |
| | 4 | CP1,2,3,4 CABLES | 220-0131 | REF. ONLY |
| | 1 | PRINTER CABLE | 220-0130 | REF. ONLY |
| 4 | | CP1,2,3,4 CABLE | 220-0127 | REF. ONLY |
| 1 | | TYPEWRITER | 220-0126 | REF. ONLY |
| | 1 | R1 | 330-3010 | 1K 1/4 W |

DEC 07 1978

E-REV 2

| REVISION | | | |
|---|---|---|---|
| 9 | CHECKED PER ECN 6390 APPD. | F.B. 9-25-75 | F.S.S. |
| 11 | REVISED PER ECN 6410 APPD. | 10-15-75 | |
| 12 | REVISED PER ECN 6730 APPD. | 1-16-77 | |

| WANG PART NO. | ITEM | QTY | NAME |
|---|---|---|---|
| | | | WANG LABORATORIES, INC. TEWKSBURY, MASS. U.S.A. |
| MATERIAL | | | MODEL NO. SEE ABOVE |
| FINISH | | | SEE ENGRG SPECIFICATIONS |

| MATERIAL | DESCRIPTION | | | |
|---|---|---|---|---|
| | BY | DATE | APPROVED BY | DATE |
| DWN | | 5-25-75 | E ENGR | |
| CHK | | | M ENGR | |
| E C CONTROL | | | MFG ENGR | |

TITLE SCHEMATIC PRINTER MULTIPLEXER

| WANG PART NUMBER | SIZE | DRAWING NUMBER | REV. |
|---|---|---|---|
| 210-6716 | D | 6716 | 2 |

TOL. EX AS NOTED XX ± .010 FRAC. ± 1/64 XXX ± .005 ANG. ± 1°-30' FINISH √

SCALE SHT 2 OF 5