LOCA.	WL. PT. NO.	VCC	±0V
L1	376-0008	14	7
L2	376-0008	14	7
L3	376-0047	14	7

SPARES		
TYPE	LOC.	SP
7432	L2	1

COMPONENT	WL PT NO
R1,2	330-4047
R3	330-3047
R4,6	330-3010
R5,7	330-3022
R8	331-1010
C1	300-4011
C2,3	300-1930
C4,5,6	300-1900
C7	300-4022
D1	380-1001
D2	380-2121
Q1	375-1034
Q2	375-1051

HOLE LEGEND

SYMB.	DESCRIPTION	QTY.
A		

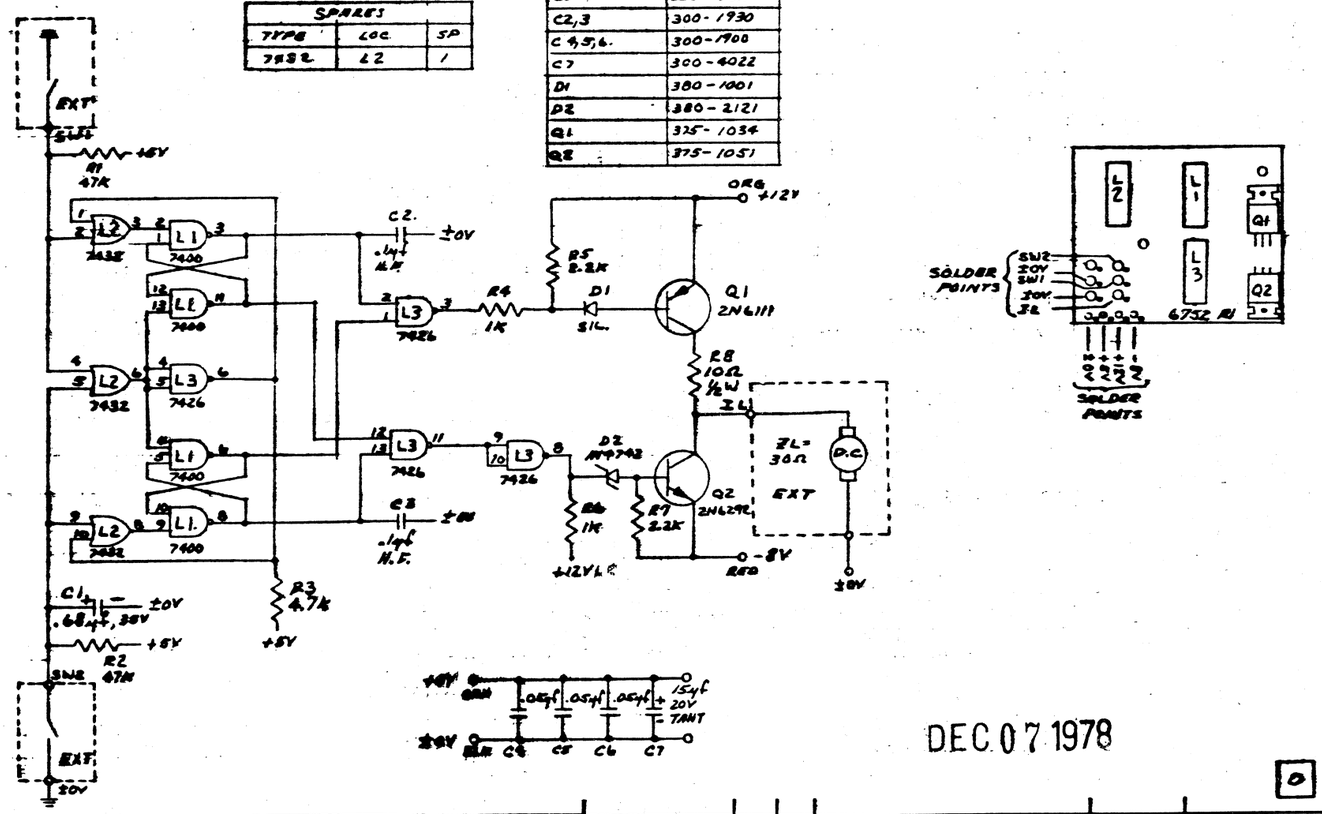

DEC 07 1978

REVISION			
K	DSA	EBA	
4-4-77	10-8-76	10-8-76	
J	CHANGED PER ECN # 213 APPD.	ENG. PER ECN # 2321	
0	1/0	1/0	

WANG PART NO.	ITEM	QTY.	NAME	MATERIAL	DESCRIPTION
Qty. Per Unit	FIRST USED ON	ASSY USED ON			

WANG LABORATORIES, INC. TEWKSBURY, MASS. U.S.A.

BY	DATE	APPROVED BY	DATE
DWN EBA	10-8-76	E ENGR	1-1-1976
CHK		M ENGR	
E. C. CONTROL		MFG ENGR	

MATERIAL

MODEL NO. 2272

SEE ENGRG SPECIFICATIONS No.

FINISH

TOL. EX. AS NOTED .XX ± .010 FRAC. ± 1/64 .XXX ± .005 ANG. ± 1°30' FINISH √

SCALE FL SHT 4 OF 5

TITLE SCHM. FOR DRUM PLOTTER ROLLER OPTION

WANG PART NUMBER	SIZE	DRAWING NUMBER	REV
210-6752	C	6752	1

2919 D