THIS DOCUMENT IS THE PROPERTY OF WANG LABORATORIES, INC. AND SHALL NOT BE REPRODUCED OR COPIED, OR USED AS A BASIS FOR THE MANUFACTURE OR SALE OF APPARATUS OR SERVICES WITHOUT PERMISSION.

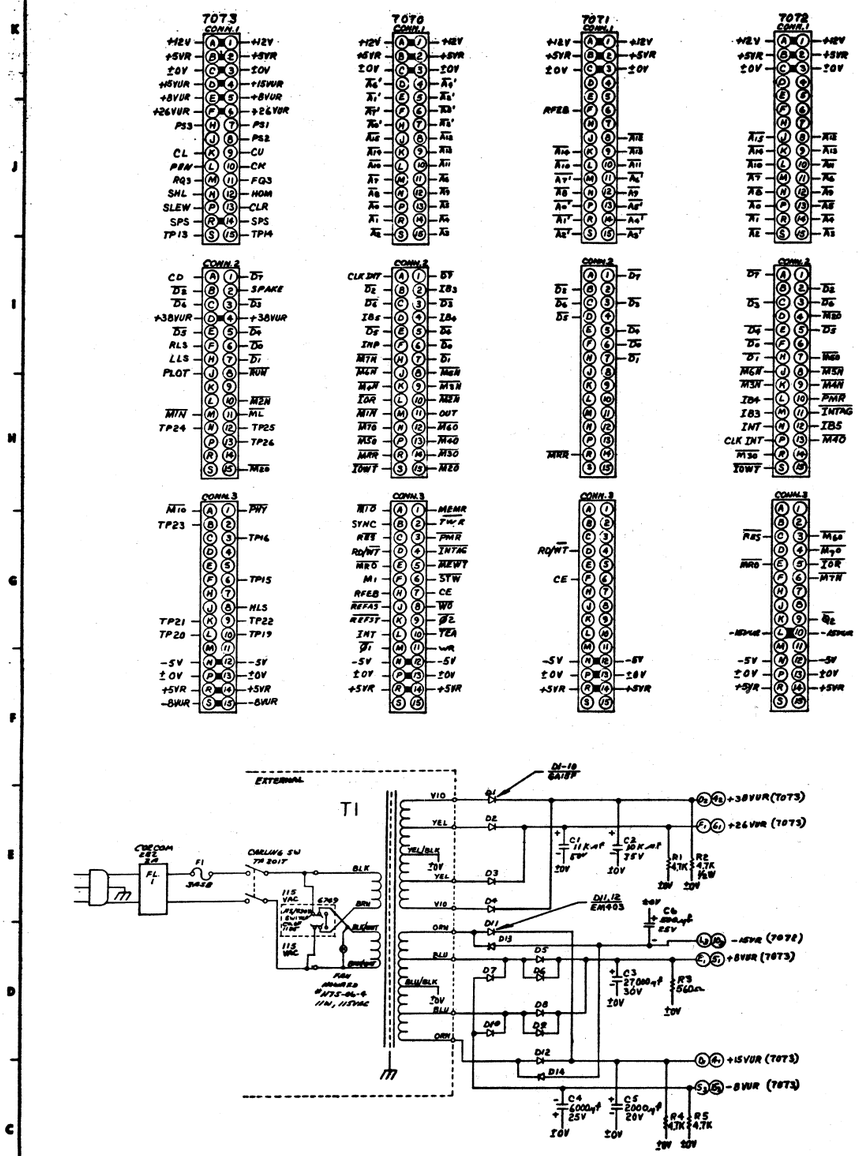

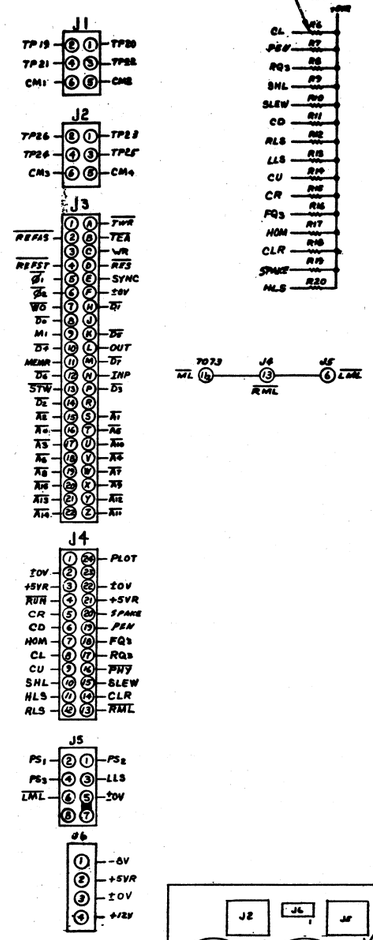

COMPONENT	W.L. PART NO.
C1	300-3047
C2	300-3077
C3	300-3069
C4	300-3073
C5	300-3058
C6	300-3021
D1-10	380-3004
D11,12,13,14	380-4000
J1,2	654-1186
J5	654-1190
J3	350-0021
J4	376-9016
J6	654-1194
30 PIN CONN.	350-0011
R1,4,5	330-3047
R2	331-3047
R3	330-2056
R6-20	330-4010

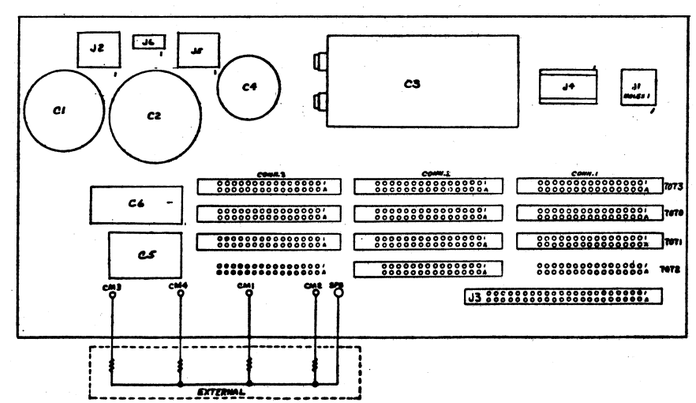

DEC 07 1978

REVISION							
0	DWN BK CHK	PER ECN 6311	BK 4-6-76	4-5-76	4-5-76	4-5-76	
1	DWN BK CHK	REVISED PER ECN 6311	BK 4-6-76	5-17-76	5-26-76	11-8-76	
2	DWN BK CHK	REVISED PER ECN 6311	BK 5-17-76	5-26-76	11-8-76	11-20-76	
3	DWN BK CHK	REVISED PER ECN 6311	BK 5-26-76	11-8-76	11-20-76	11-23-77	
4	DWN BK CHK	REVISED PER ECN 6311	BK 11-8-76	11-20-76	11-23-77	7-8-78	
5	DWN BK CHK	REVISED PER ECN 6311	BK 11-20-76	11-23-77	7-8-78		
6	DWN BK CHK	REVISED PER ECN 6311	BK 11-23-77	7-8-78			

WANG PART NO.	ITEM	QTY	NAME	MATERIAL	DESCRIPTION
			WANG LABORATORIES, INC. TEWKSBURY, MASS. U.S.A.		
			MODEL NO. 2212W		
			TITLE DRUM PLOTTER MOTHERBOARD		
210-7074	E	7074	7		