DO NOT SCALE

HOLE LEGEND		
DRILLED OR PUNCHED HOLE TOLERANCES:	HOLE DIA.	TOL.
	.0135 to .125	+.003 −.001
	.126 to .250	+.004 −.001
	.251 to .500	+.005 −.001

IDENT.	DESCRIPTION	QTY.
A		

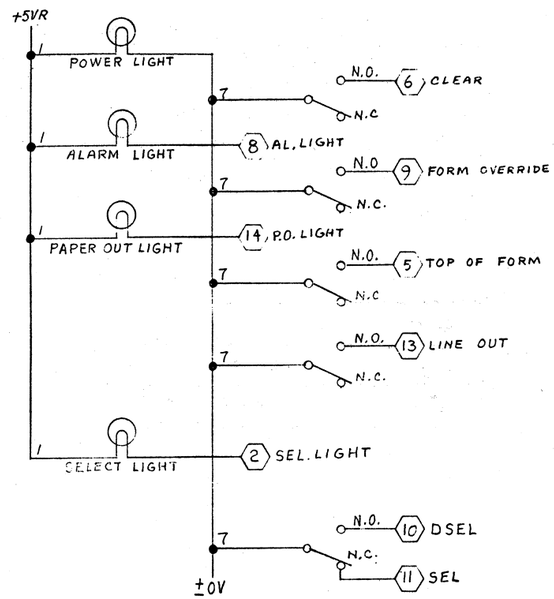

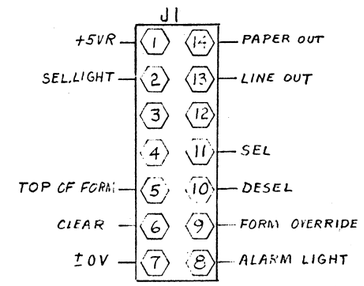

COMPONENT	W.L. PART NO
SW1 - SW5	325-2305
L1 - L4	370-0015
L1-L4 (w/ DEL)	370-1020
J1	220-3027

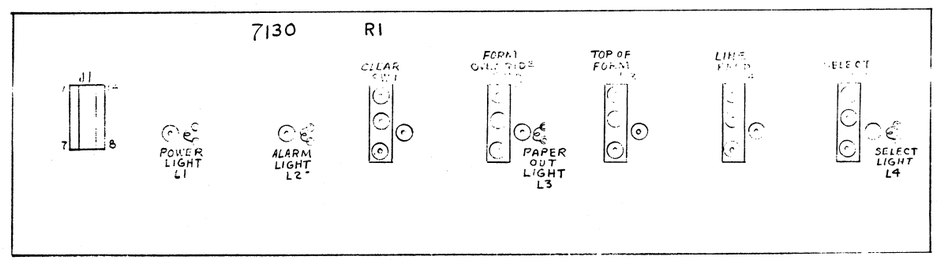

JAN 08 1979

0

NO.	REVISION	DATE	BY
0	ORIGINATED PER DWR# E339 APP'D: 5/5/77		
1	REVISED PER ECN #6837 APP'D: 5/5/77		

WANG PART NO	ITEM	QTY	NAME
Qty. Per Unit	FIRST USED ON	ASSY USED ON	

WANG LABORATORIES, INC. TEWKSBURY, MASS. U.S.A.

MATERIAL

FINISH

MODEL NO. 77

SEE ENGRG SPECIFICATIONS No.

TOL. EX. AS NOTED .XX ± .010 FRAC. ± 1/64 .XXX ± .005 ANG ± 1°30' FINISH 128 √

SCALE — SHT 4 OF 5

MATERIAL		DESCRIPTION	
BY	DATE	APPROVED BY	DATE
DWN EK	5-3-77	E ENGR	5/5/77
CHK		M ENGR	
E. C. CONTROL		MFG ENGR	

TITLE IOP CONTROL PANEL

WANG PART NUMBER	SIZE	DRAWING NUMBER	REV
210-7130	C	7130	1